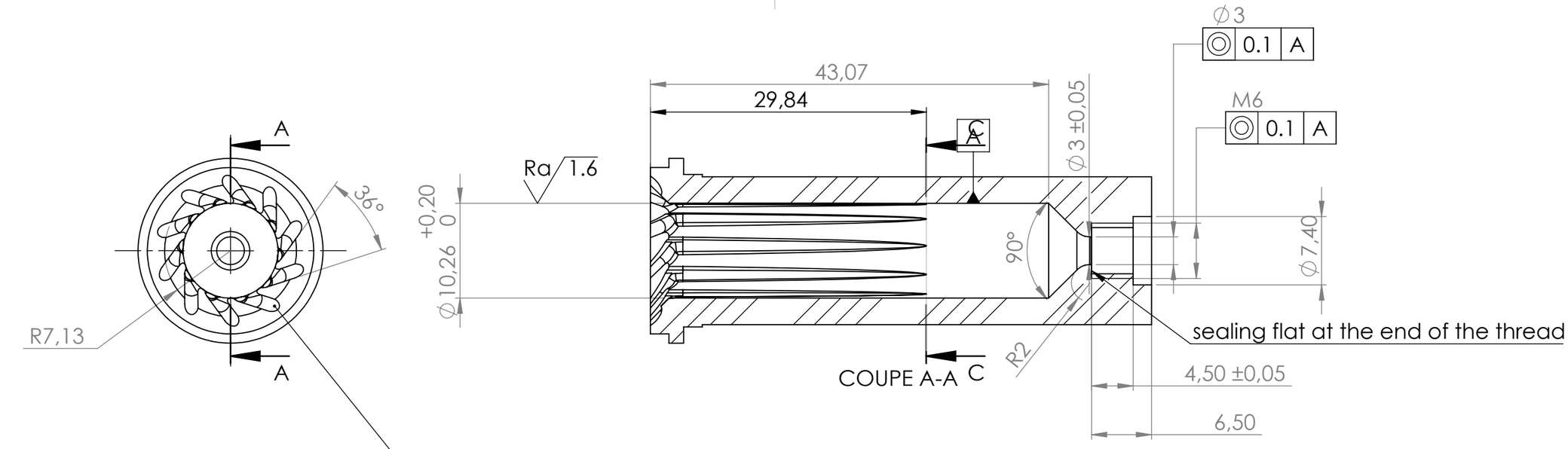

Made by doing a 1.5mm circle with center inline with the chamfer.
Starting at the outer chamfer line.
Finishing in the circle that is describe cut C-C e.g inner chamfer line.
No particular orientation is needed as long as the 10 cuts are separted by 36°

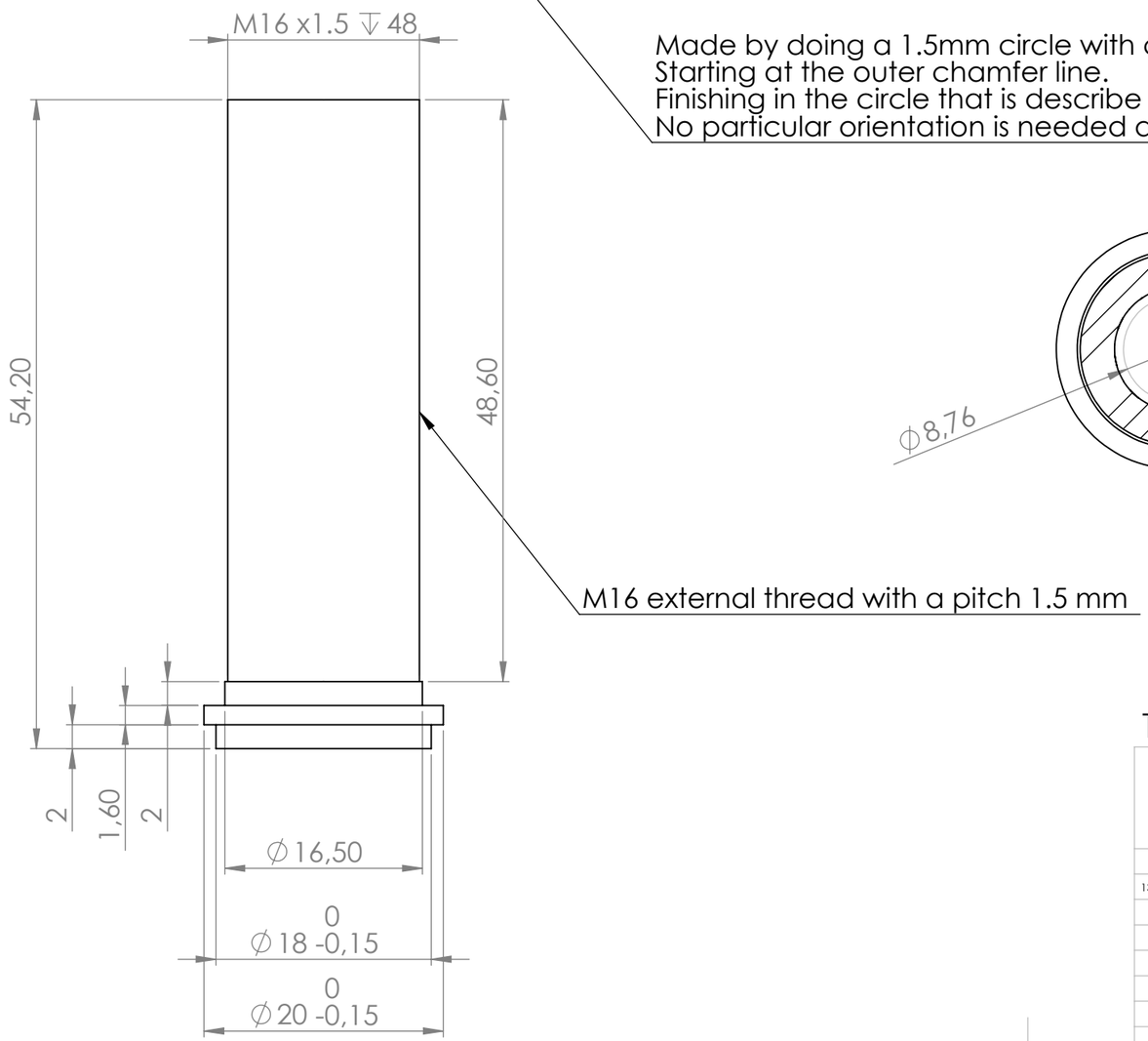

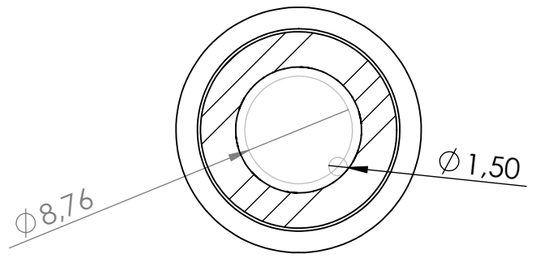

C-C

TOLERANCE : ISO 2768 - mK

TITLE:

Tube

DATE	NAME	REVISION	MODIFICATION
13/09/2024		AA	Création

Codification :

Description :

FINISH:

MATERIAL:

SCALE: 2:1 | WEIGHT: | SHEET 1 OF 1 | A3