DETAIL C
SCALE 4 : 1

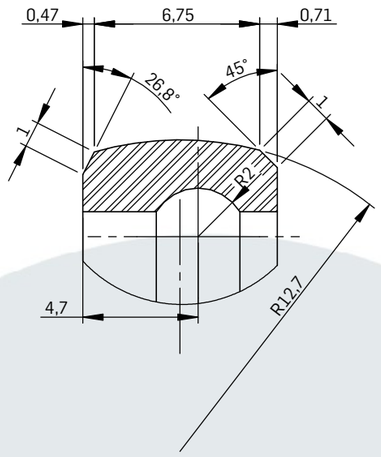

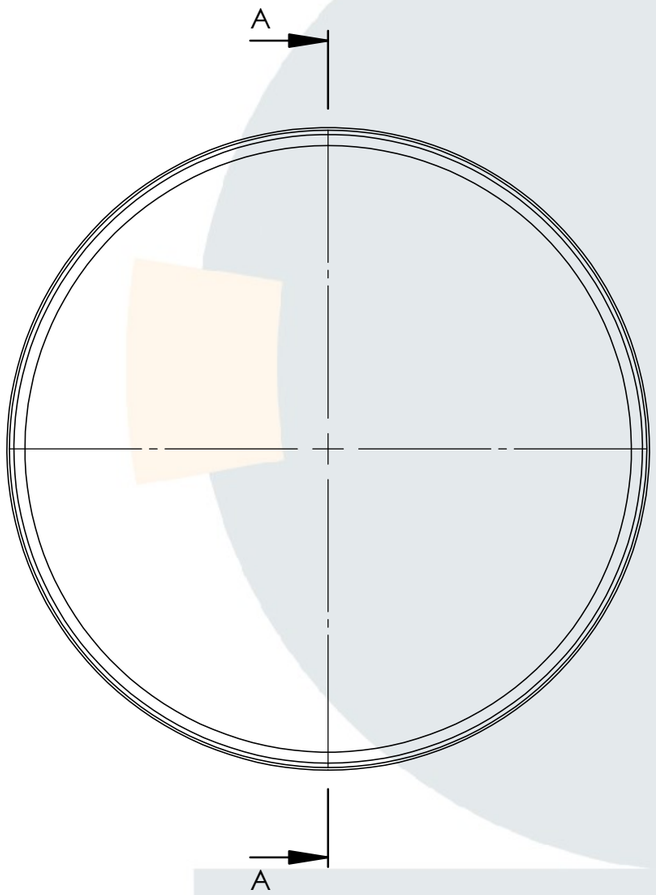

SECTION A-A

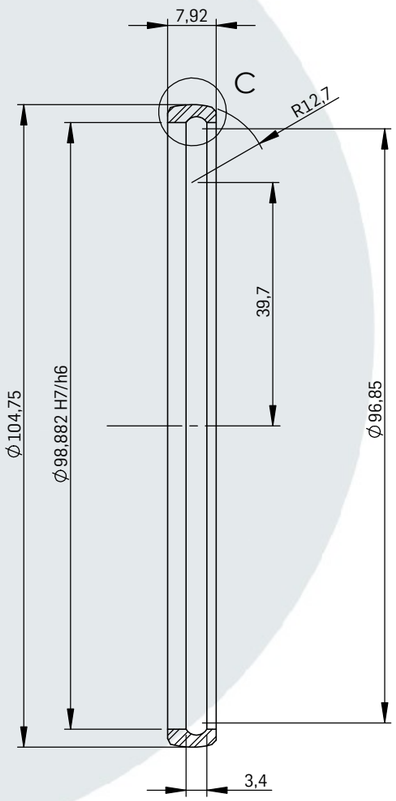

DIMENSIONS ARE IN MILLIMETERS UNLESS OTHERWISE STATED

REMOVE ALL BURRS & SHARP EDGES

ONLY MACHINE SURFACES MARKED AS

APPROVALS

DIPOSTEL

CUSTOMER

SUPPLIER

MATERIAL:
1.4125 (X105CrMo17)

FINISH:
SELF COLOUR

MASS (Gram):
46.56

TOLERANCES - GENERAL MACHINING TO ISO 2768 - mK

LINEAR DIMENSION								BROKEN EDGE				ANGULAR DIMENSION				
>0.5 to 3	>3 to 6	>6 to 30	>30 to 120	>120 to 400	>0.5 to 3	>3 to 6	>6	≤10	>10 to 50	>50 to 120	>120 to 400
±0.1	±0.1	±0.2	±0.3	±0.5	±0.2	±0.5	±1	±1°	±30'	±20'	±10'

≤10	>10 to 30	>30 to 100	>100 to 300	>300 to 1000	≤100	>100 to 300	>300 to 1000
0.05	0.1	0.2	0.4	0.6	0.4	0.6	0.8

REV.	Description	Drawn By	Drawn Date	Checked By	Checked Date
C					
B					
A	CREATION	FH	24/07/2024		

Scale: 1:1
Sheet Size: A3
Sheet: 1/1

Part / Drawing Title: Wheel_Ring
Part / Drawing Number: **020CMT_Wheel_Ring**
Dipostel Sales Code:
Stick type:
Stick Qty:

305 Avenue de la marjolaine
34130 Saint-aunès (FRANCE)
Tél : +33 (0)4 67 720 222
Mail: info@dipostel.com
Web: www.dipostel.com

This drawing is copyrighted & exclusive property of Dipostel SAS, it must not be copied, used for manufacture, or otherwise disclosed whitout approval of the company.