NOTES :
1. Material : SPCC t=2.0mm.
2. Treatment : BLACK PAINT.
3. Extruded hole with thread must can withstand 12kg-cm Min.
4. The thickness must keep at least 80% at its bend point and the inside bend radius 0.2mm Max.
5. Burrs' height can not exceed 5% of material thickness.
6. The radius of non-indicated corners and sharp edgaes is 0.3mm.
7. Part must clean and free of tool mark.
8. Products must be the same as engineering approval sample.
9. Any tooling modification must be approved by DELTA.
10. Products must meet DELTA general specification 10000-0002.
11. The banned substances must meet Delta 10000-0162 standard, and the "Taiwan Green Mark" requirements.
12. The dimension include "oval symbol" is the key dimension.

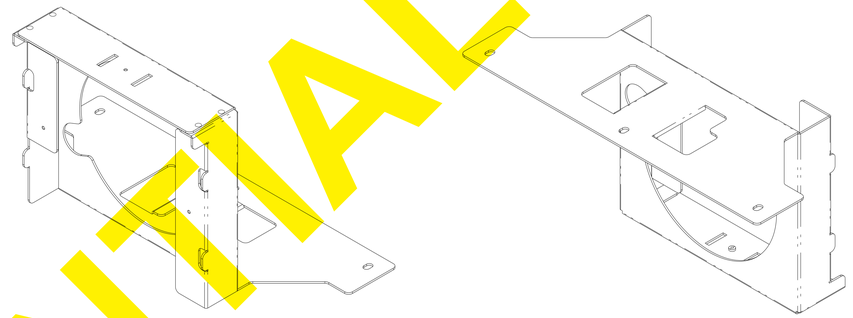

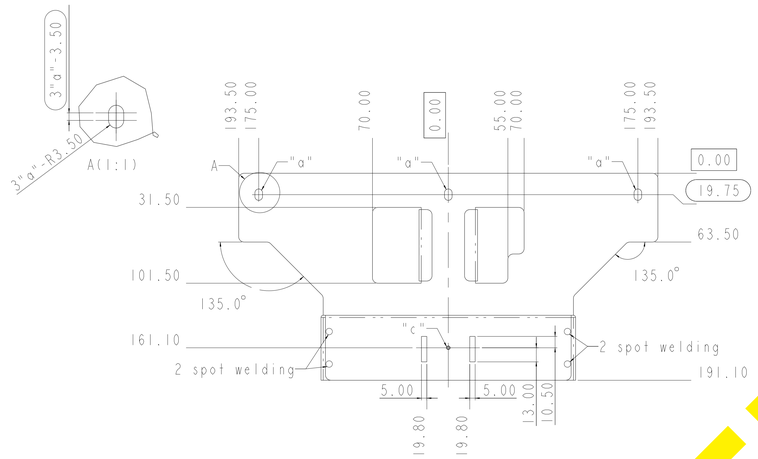

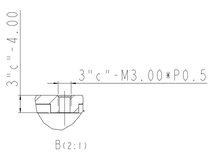

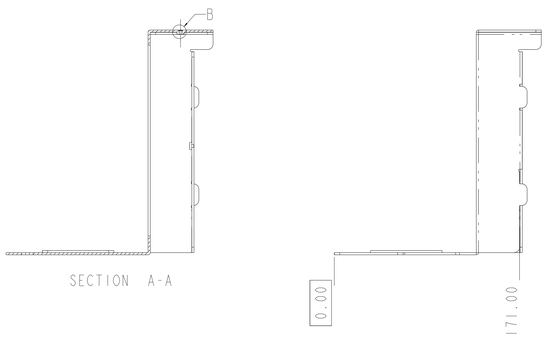

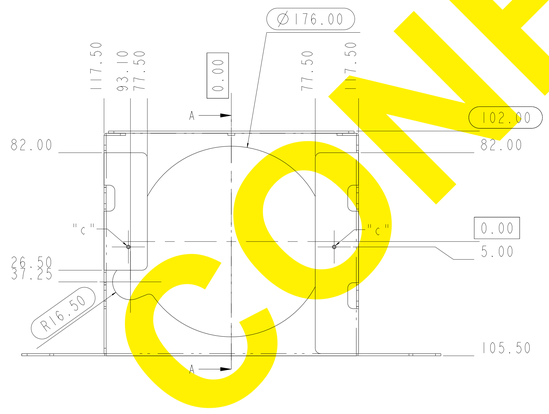

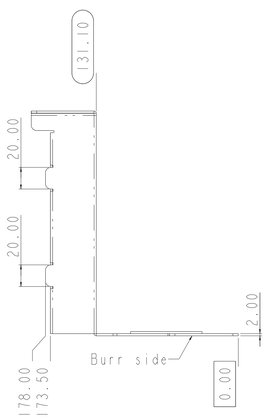

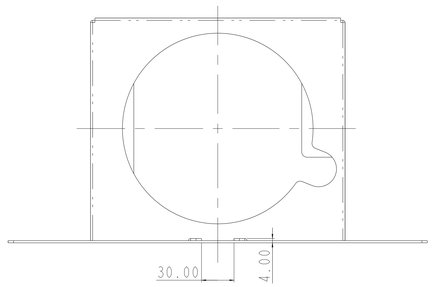

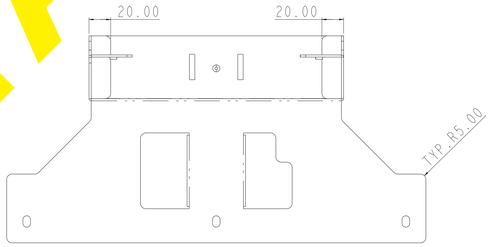

DELTA CONFIDENTIAL

DDCC-ChungLi Document is Released 2024.03.21 13:45:10 +08'00'

台達電子工業股份有限公司
DELTA ELECTRONICS, INC.

Drawn: MACGYVER.KU

Design: MACGYVER.KU

THESE DRAWINGS AND SPECIFICATIONS ARE THE PROPERTY OF DELTA ELECTRONICS, INC. AND SHALL NOT BE REPRODUCED OR USED AS THE BASIS FOR THE MANUFACTURE OR SELL OF APPARATUSES OR DEVICES WITHOUT PERMISSION.

THIRD ANGLE PROJECTION

Description: BRACKET SPCC MAIN PAINT BLK

DIMENSIONAL TOLERANCES HOLES : ±0.05 ANGLES : ±0.5°

( )		(∨)		( )				( )	
<30	: ±0.25	DECIMALS		UP~100	: ±0.2	250~300	: ±0.4	UP~600	: ±1.5
>30~100	: ±0.35	X	: ±0.3	100~150	: ±0.25	300~350	: ±0.45	600~900	: ±2.4
>100~300	: ±0.5	X.X	: ±0.2	150~200	: ±0.3	350~400	: ±0.5	900~OVER	: ±3.1
ABOVE 300	: ±0.6	X.XX	: ±0.1	200~250	: ±0.35				

A0 SIZE

Part No. 3456954200

REV. 00

SCALE	1:2	UNIT	mm	USED ON	H7TLS-008	SHEET 1 OF 1	ISSUE DATE: 2024/03/18

FRAME NAME: DF-MEA0H-1R01.DWG