Number of parts: 1
Matter: Steel (any kind)
Unit: Millimeter
General tolerance: +/- 0.1 mm (if not specified)
Contact: Jean-Pierre RIVET
Email: jean-pierre.rivet@oca.eu

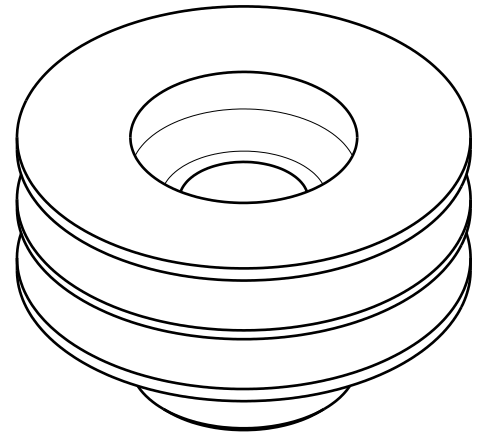

Isometric view
Scale : 1:2

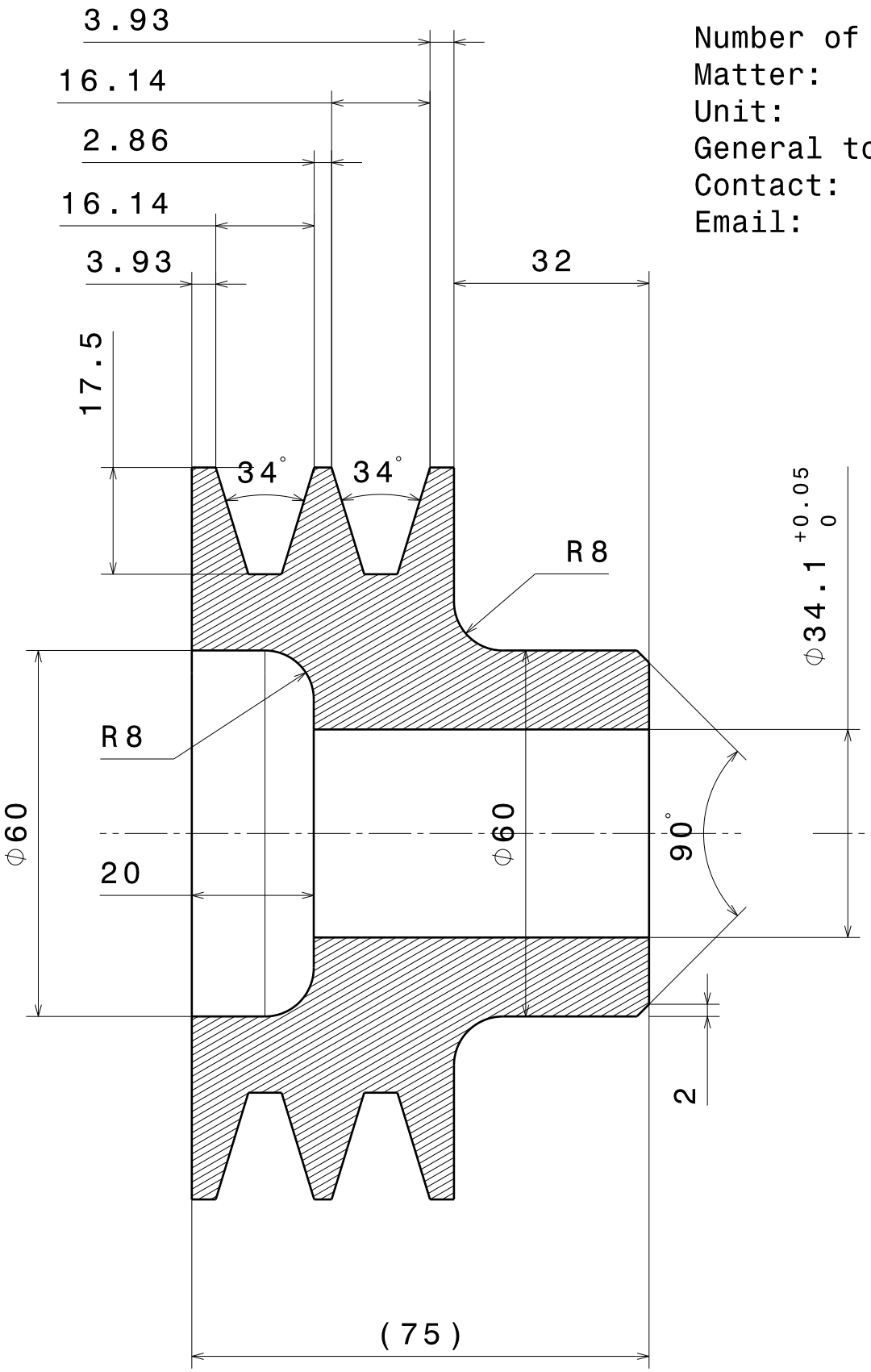

Section A-A
Scale : 1:1

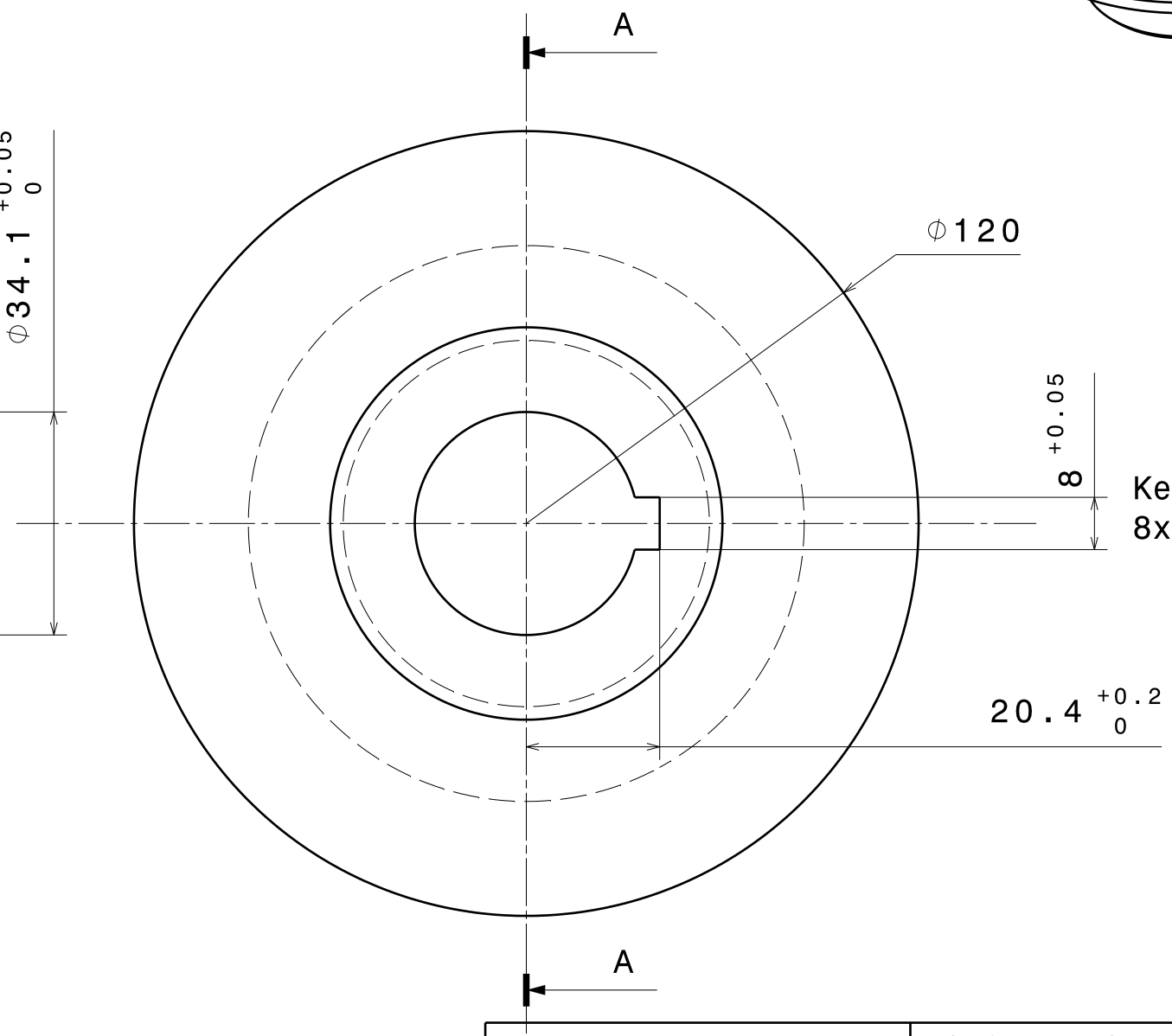

First angle projection

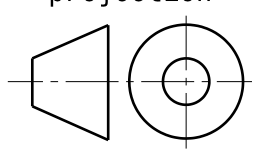

This drawing is our property. It can't be reproduced or communicated without our written agreement.

OBSERVATOIRE DE LA COTE D'AZUR - RIVET
Boulevard de l'Observatoire, CS 34229
06304 NICE Cedex 4, FRANCE

DRAWN BY J.P. RIVET	DATE 23/05/2024	DRAWING TITLE PULLEY FOR DUAL SPB BELT WITH 8 MILLIMETER KEYWAY			
CHECKED BY J.P. RIVET	DATE 23/05/2024	SIZE A3	DRAWING NUMBER 08.04.001.001.002		REV 1
DESIGNED BY J.P. RIVET	DATE 23/05/2024	SCALE 1:1	WEIGHT(kg) 2,737		SHEET 1/1