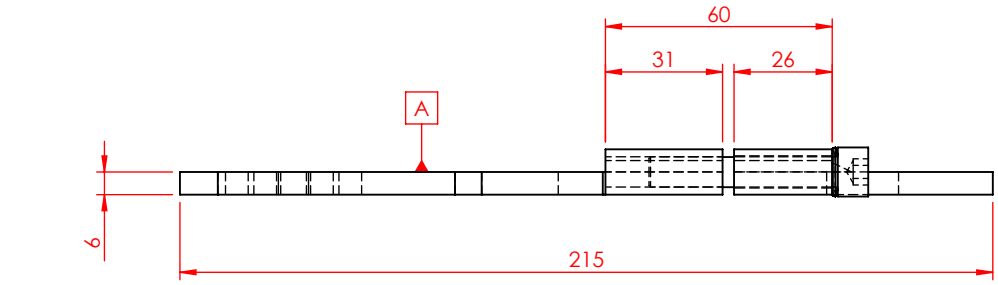

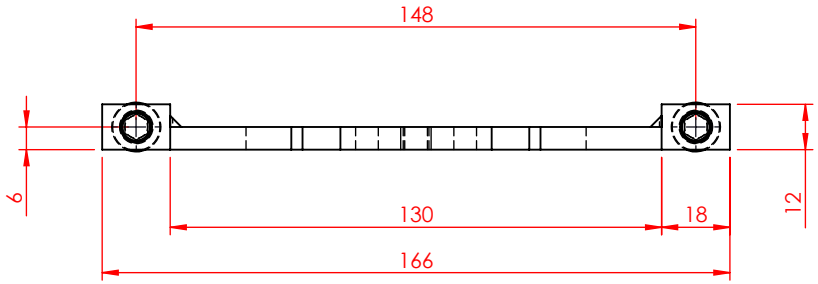

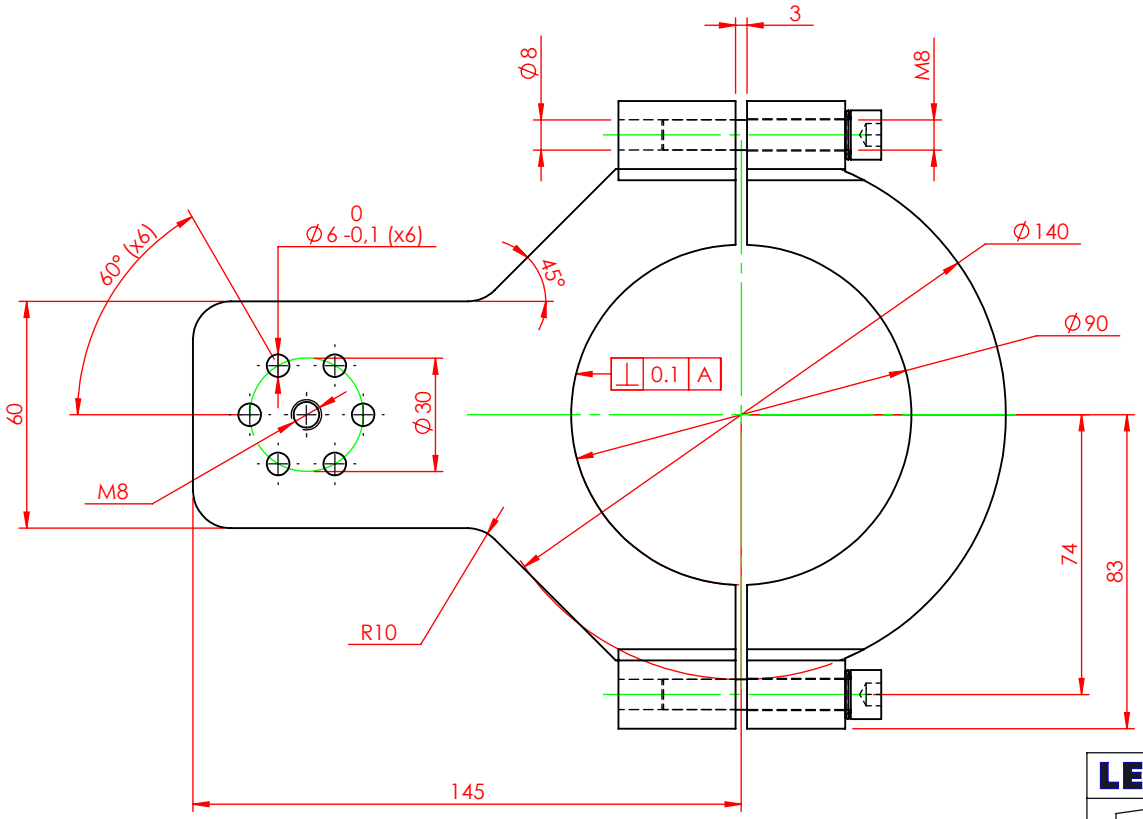

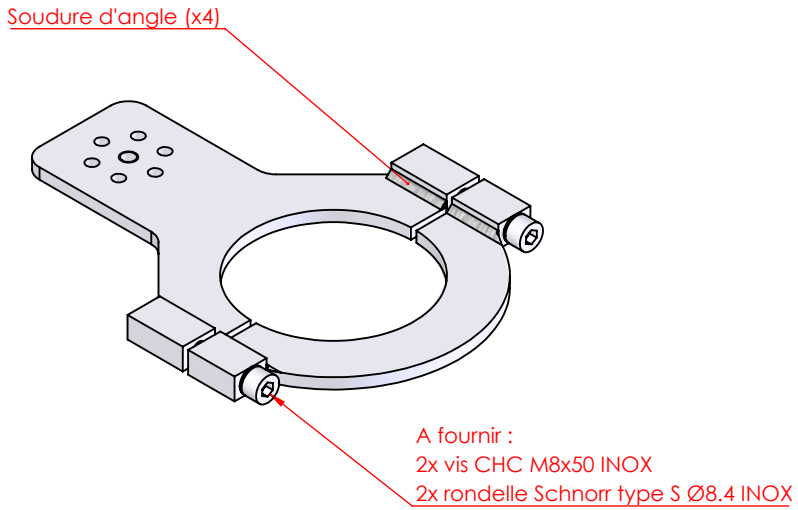

LEONI	Finish: Casser les angles vifs 0.5x45° / Break sharp edges 0.5x45° General tolerances: ISO2768 mK	Material: INOX 304L Treatment:-	
Weight : 0.83 kg	Description FR : SUPPORT AXE 6_Ø90_0°		Draft number :
Scale 1:2	*Description EN :* *J6 SUPPORT_Ø90_0°*		**21762**
Size A4			
Sheet : 1/1	Sales number : 1SU01762	Prod. number : 3SU01762	Rev. : A

Date	Name	
06/10/2021	Q.D	(21-30774) Création du plan
		(Request) Modification

CE PLAN EST LA PROPRIETE DE LA SOCIETE LEONI-CIA ET NE PEUT ETRE REPRODUIT OU COMMUNIQUE SANS SON AUTHORISATION / THIS PLAN IS THE PROPERTY OF THE COMPANY LEONI-CIA AND CANNOT BE REPRODUCED OR COMMUNICATE WITHOUT HIS PERMISSION