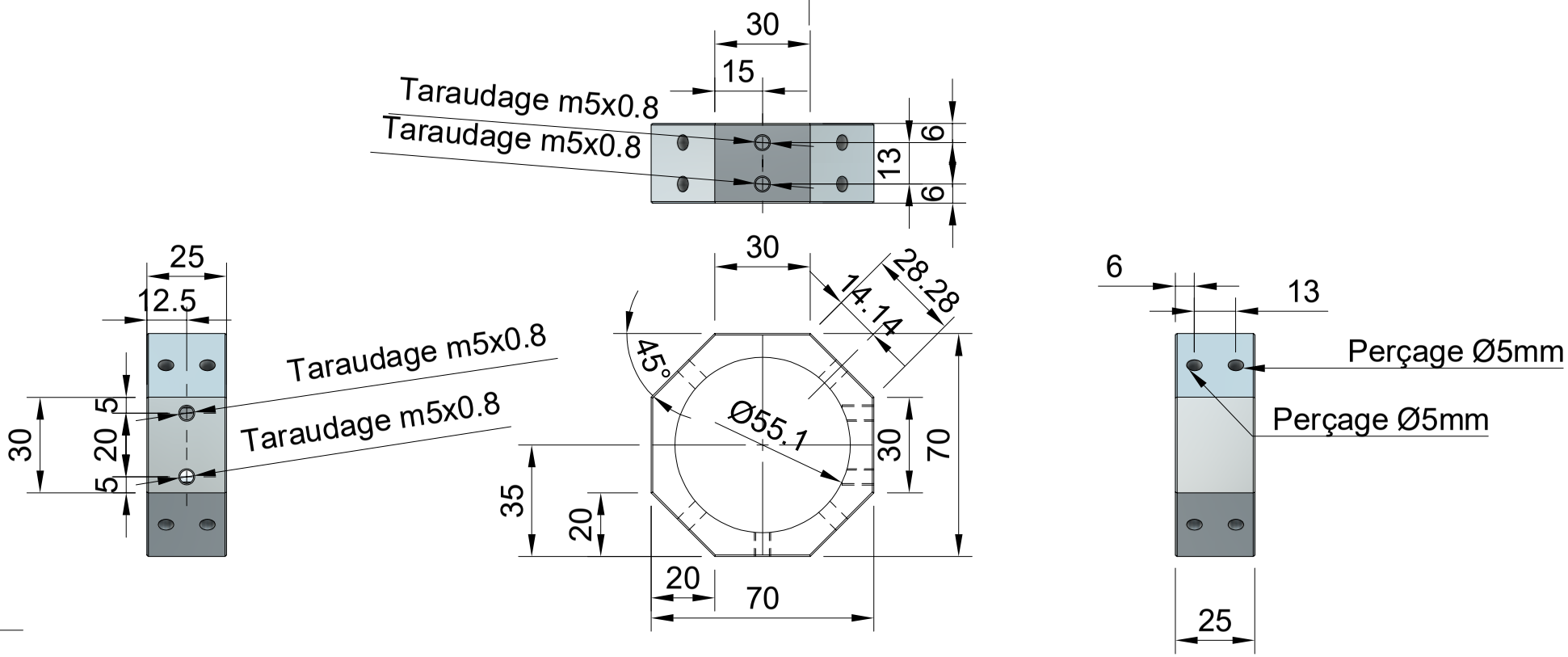

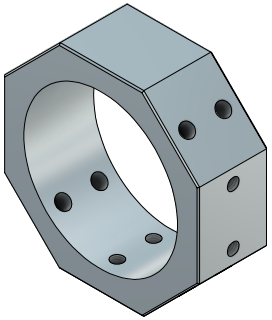

Dept.	Technical reference	Created by Jordan SPINDLER 19/02/2024	Approved by	
		Document type	Document status	
		Title Collier 1	DWG No.	
			Rev. / Date of issue	Sheet 1/1