No. ARTICLE	NUMERO DE PIECE	QTE
1	Disque et tige	1
2	Tube essai	1
3	Joint PTFE	1
4	plaque serrage	1
5	Tube serrage	1
6	écrou m14x1.5	1

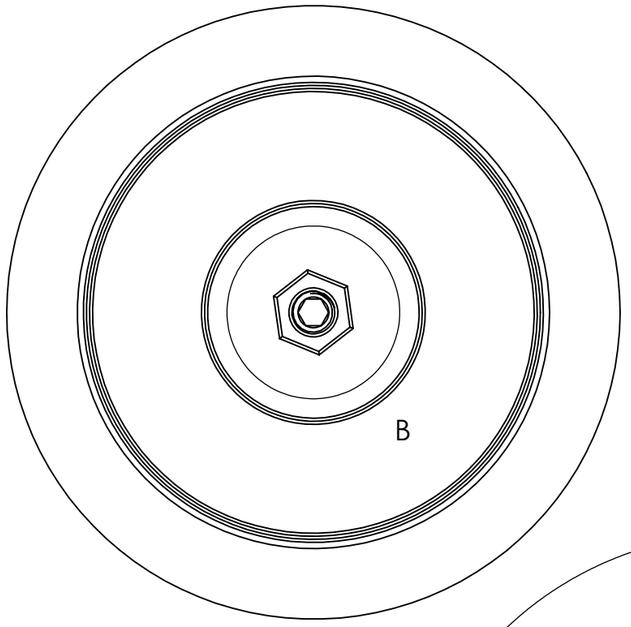

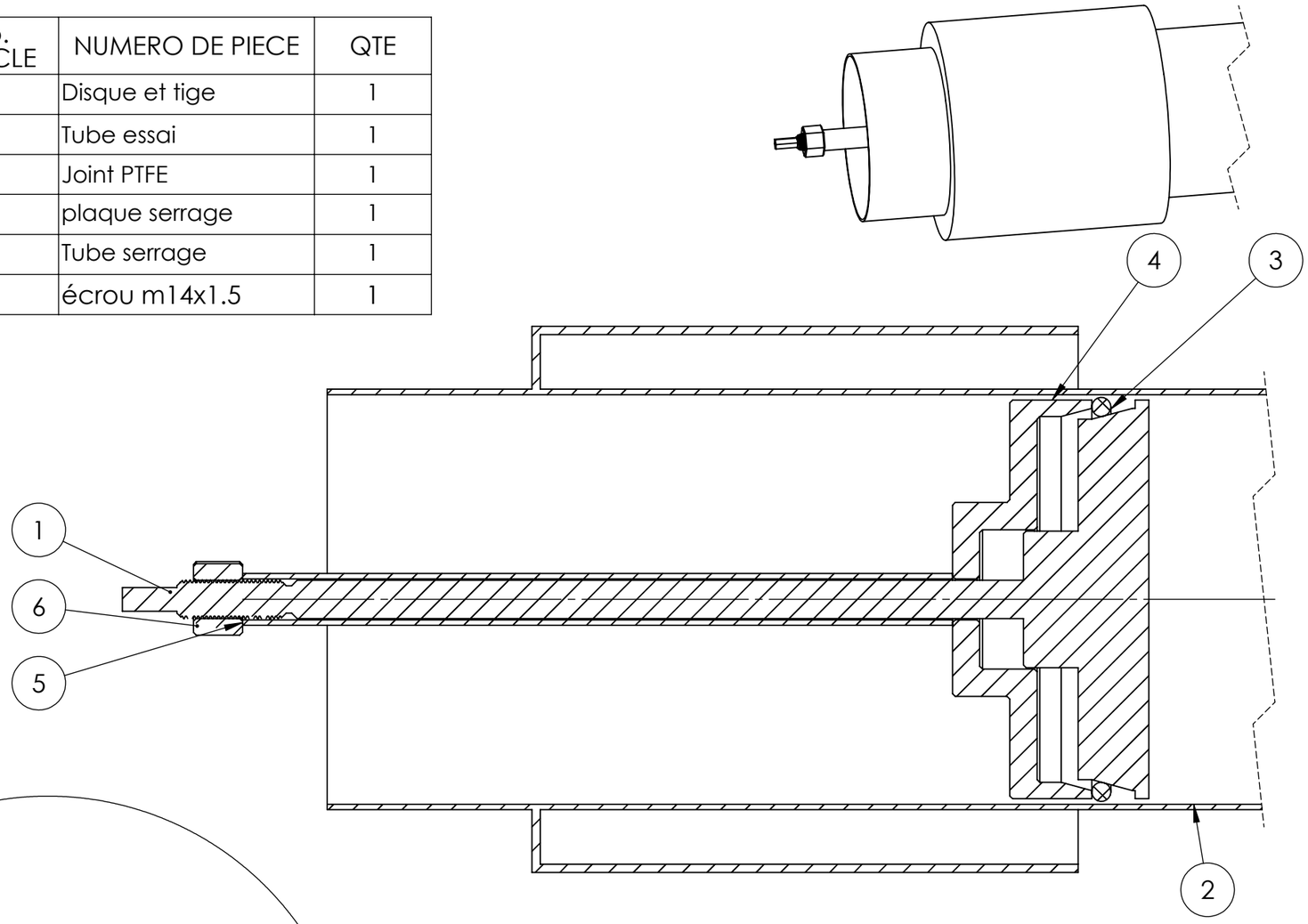

COUPE A-A
ECHELLE 1 : 2

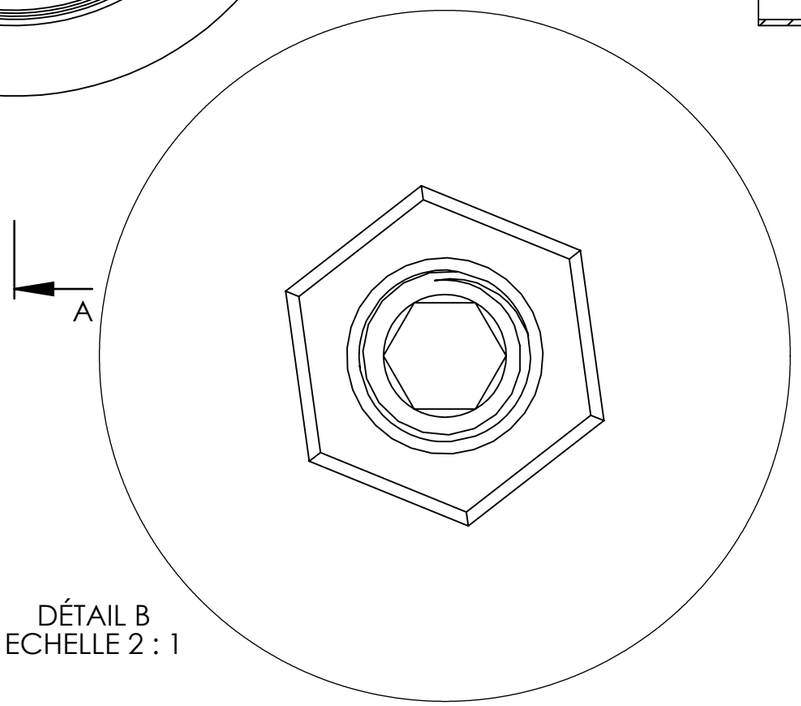

DÉTAIL B
ECHELLE 2 : 1

UNLESS OTHERWISE SPECIFIED:
DIMENSIONS ARE IN MILLIMETERS
SURFACE FINISH:
TOLERANCES:
LINEAR:
ANGULAR:

FINISH:

DEBURR AND BREAK SHARP EDGES

DO NOT SCALE DRAWING

REVISION

	NAME	SIGNATURE	DATE
DRAWN			
CHK'D			
APPV'D			
MFG			
Q.A			

TITLE:

MATERIAL:

WEIGHT:

DWG NO.

Bouchon azote

A3

SCALE:1:5

SHEET 1 OF 1