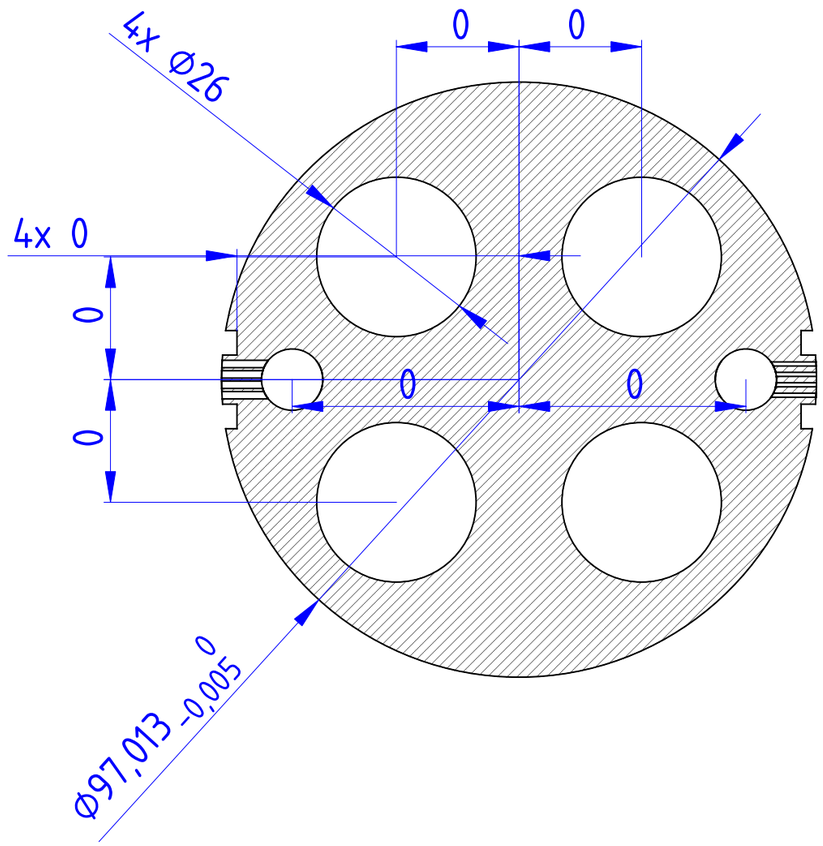

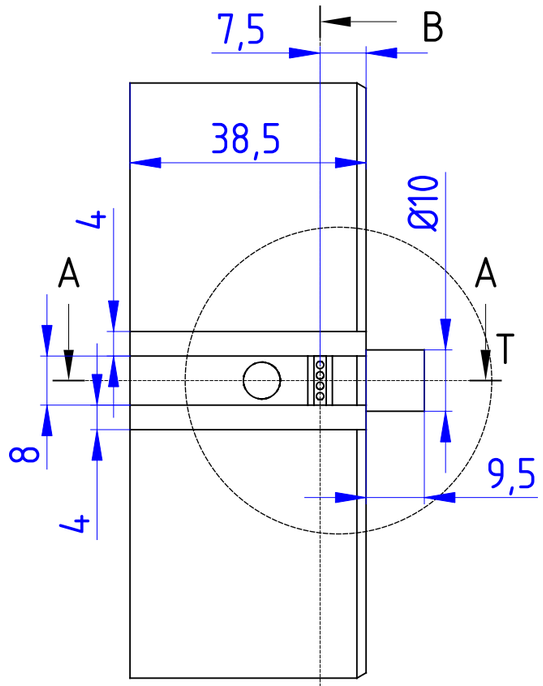

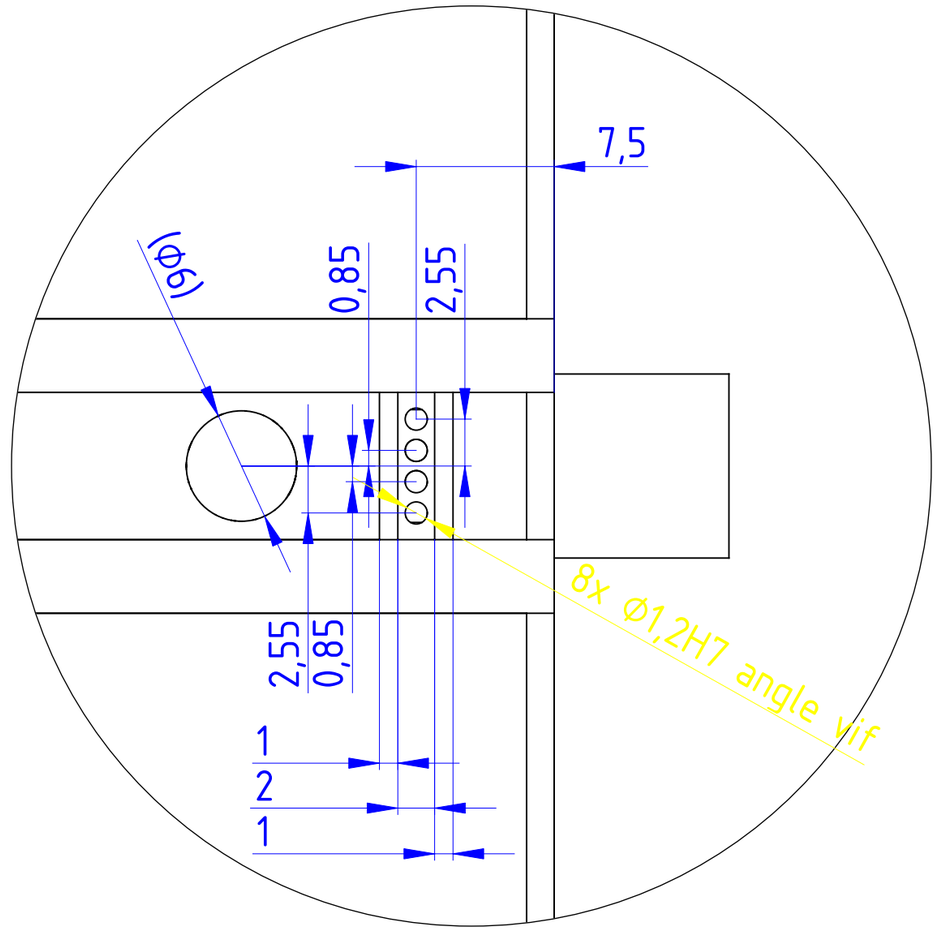

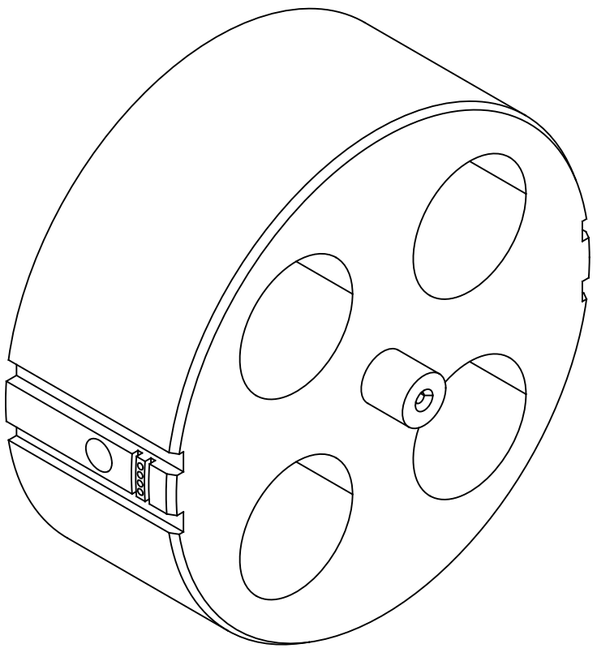

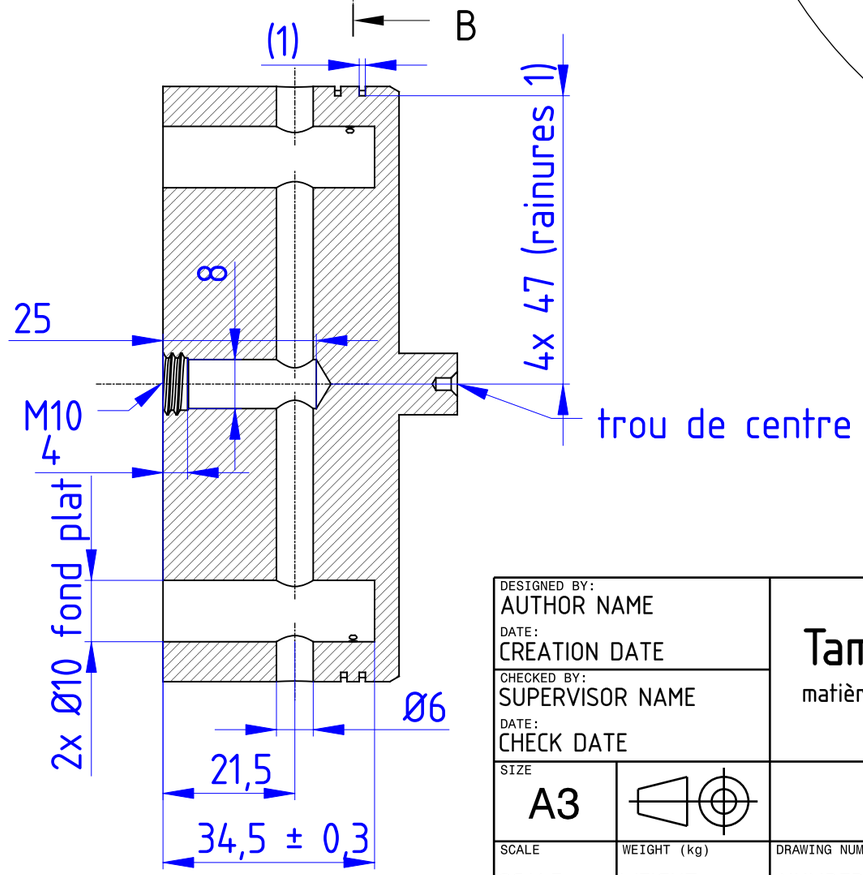

DESIGNED BY: AUTHOR NAME
DATE: CREATION DATE
CHECKED BY: SUPERVISOR NAME
DATE: CHECK DATE

Tampon Ø97.013

matière inox de trempe avec traitement 58-65 HRC

SIZE	SCALE	WEIGHT (kg)	DRAWING NUMBER	SHEET
A3	SCALE	WEIGHT	NUMBER	SHEET

This drawing is our property; it can't be reproduced or communicated without our written agreement.