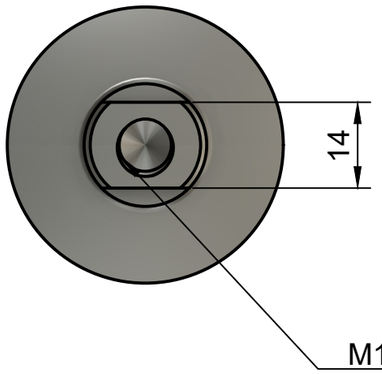


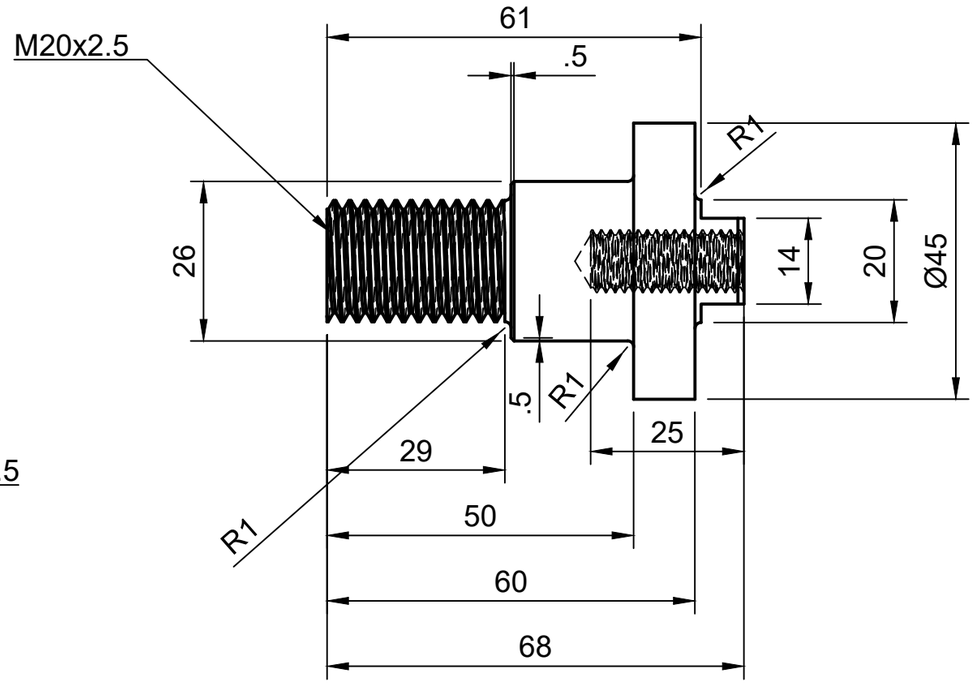


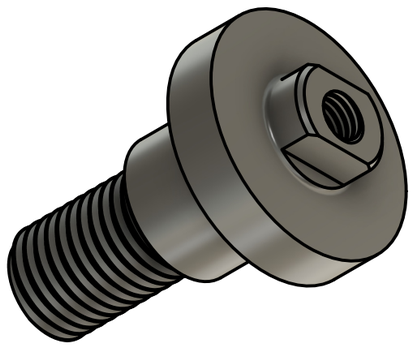

| Dept. | Technical reference | Created by<br>Dimitri Housieaux 07/10/2024 | Approved by | |
|---|---|---|---|---|
| | | Document type | Document status | |
| | | Title<br>Support fileté plaque plexiglass | DWG No. | |
| | | | Rev. / Date of issue | Sheet<br>1/1 |