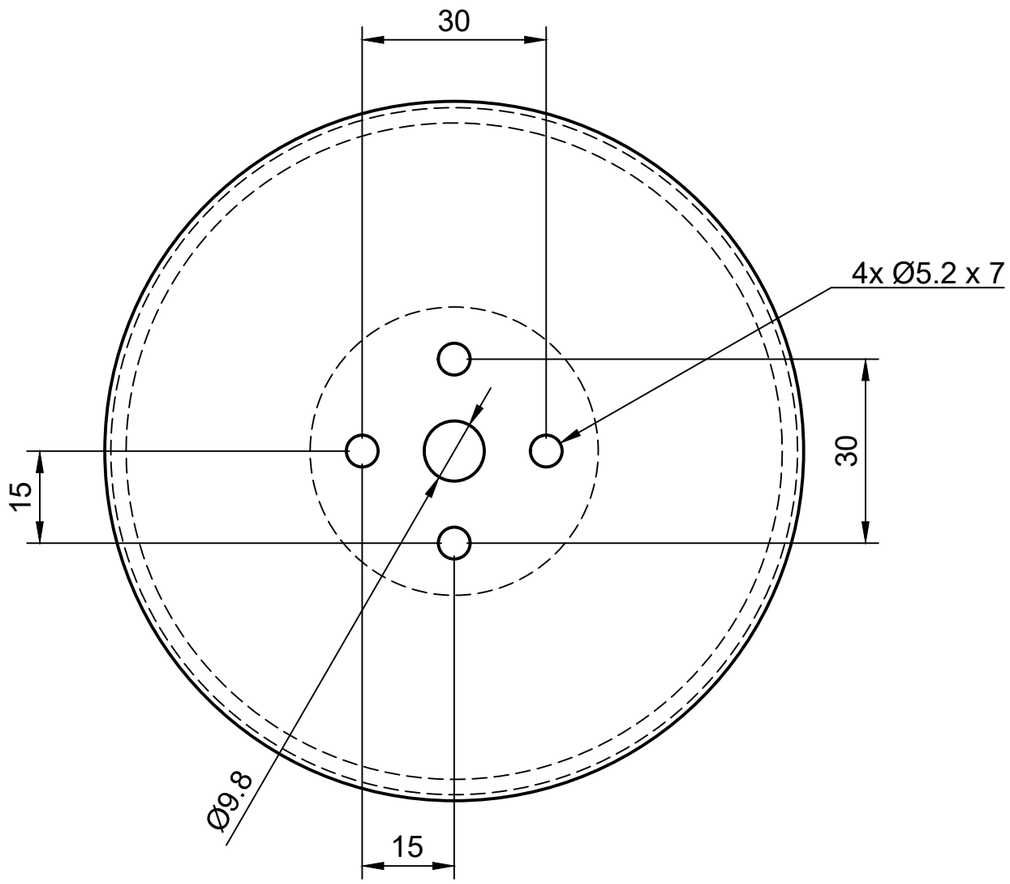

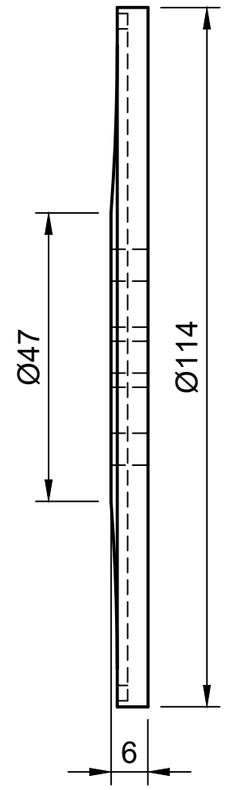

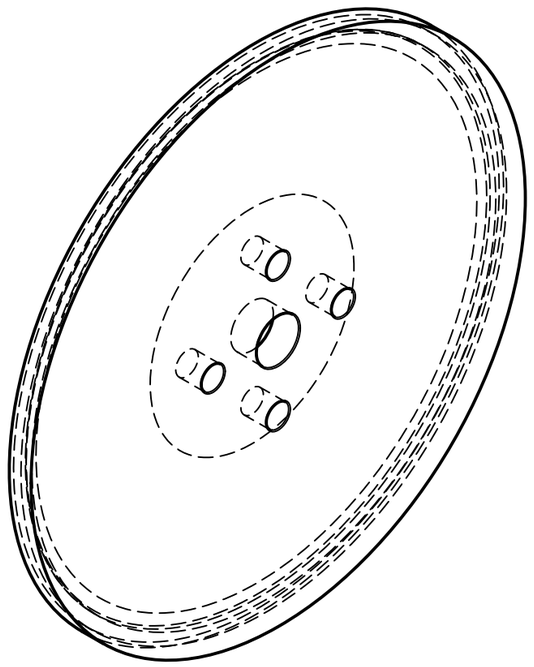

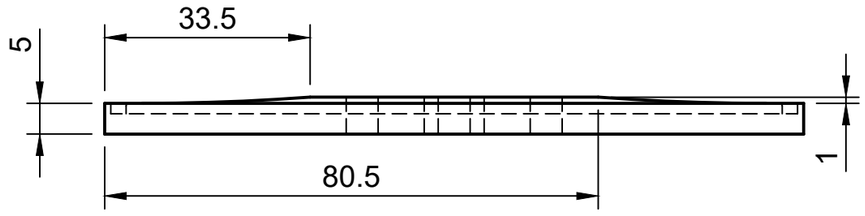

Dept.	Technical reference	Created by gaillac bertrand 07/10/2024	Approved by	
		Document type Vue de dessous	Document status	
		Title Flasque cone	DWG No. 2/3	
			Rev. / Date of issue	Sheet 1/1