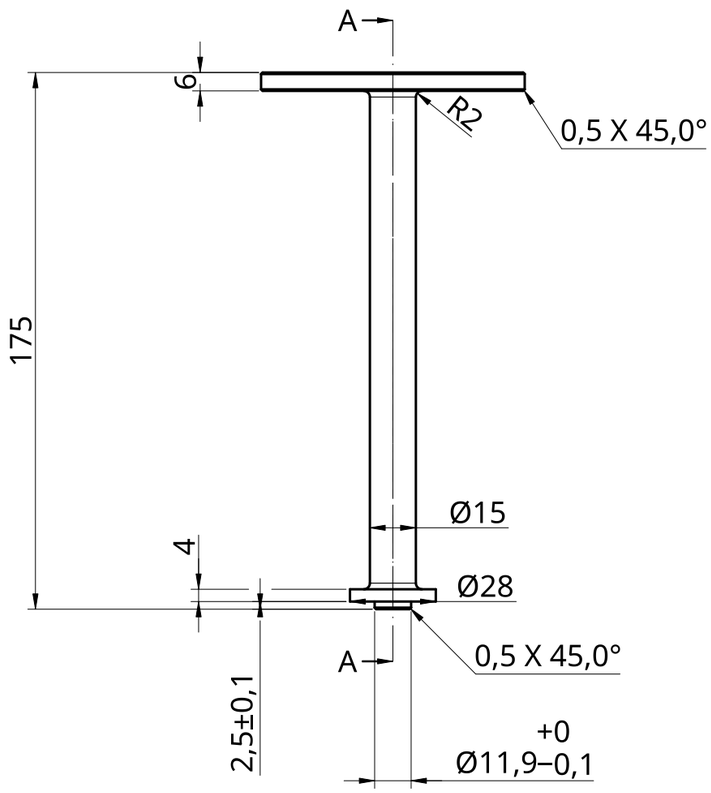

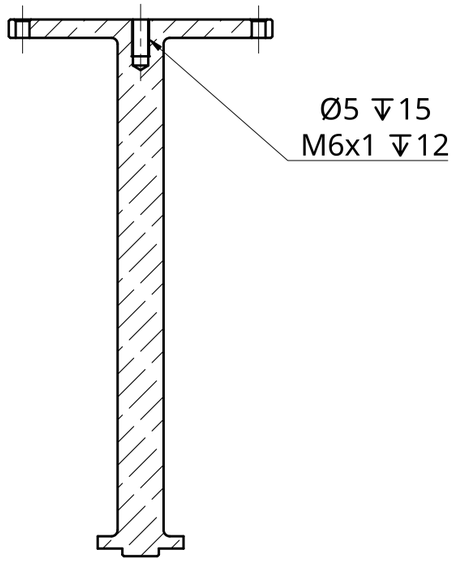

A - A

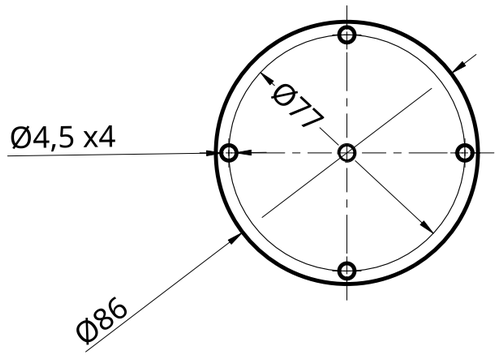

		NAME	SIGNATURE	DATE
UNLESS OTHERWISE SPECIFIED, DIMENSIONS ARE IN MILLIMETERS	DRAWN	SAM AUDEOUD		2024-10-15
ANGULAR = ± °	CHECKED			
SURFACE FINISH	APPROVED			
DO NOT SCALE DRAWING				
BREAK ALL SHARP EDGES AND REMOVE BURRS				
FIRST ANGLE PROJECTION	MATERIAL		FINISH	

TITLE: Rear bearing mounting tool

SIZE: A3 | DWG NO. | REV.

SCALE: 1:2 | WEIGHT | SHEET: 1 of 1