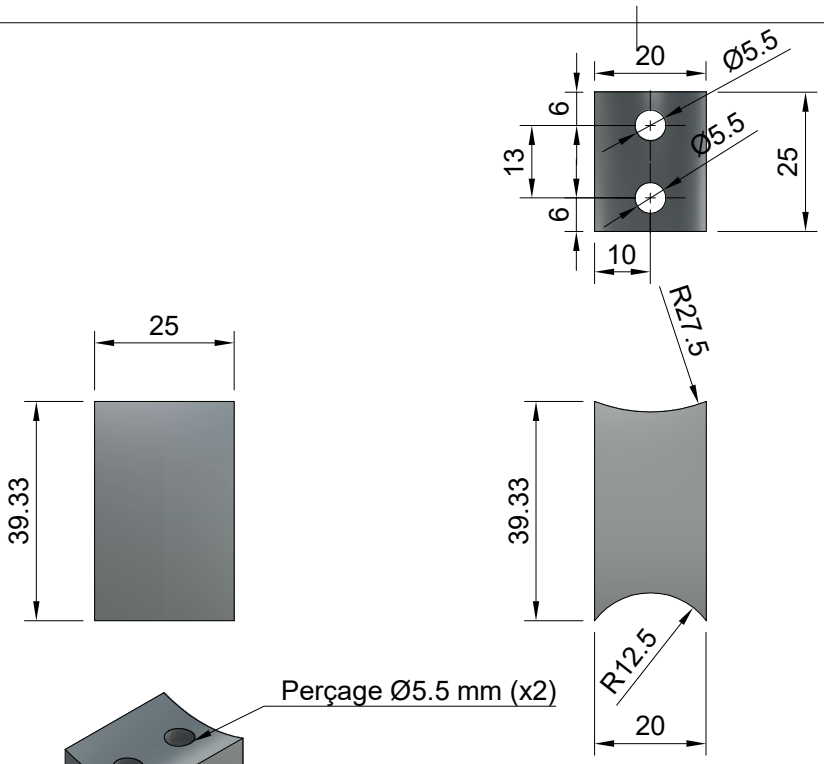

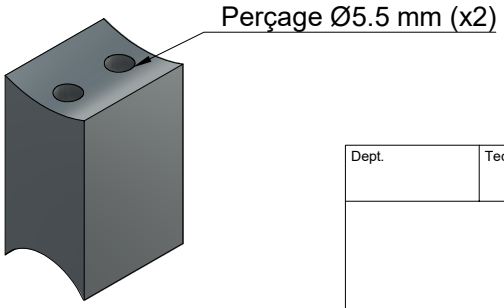

Dept.	Technical reference	Created by Jordan SPINDLER 14/03/2024	Approved by	
		Document type	Document status	
		Title Cale numéro 1	DWG No.	
			Rev. / Date of issue	Sheet 1/1