RevNo	Revision note		Date	Signature	Checked

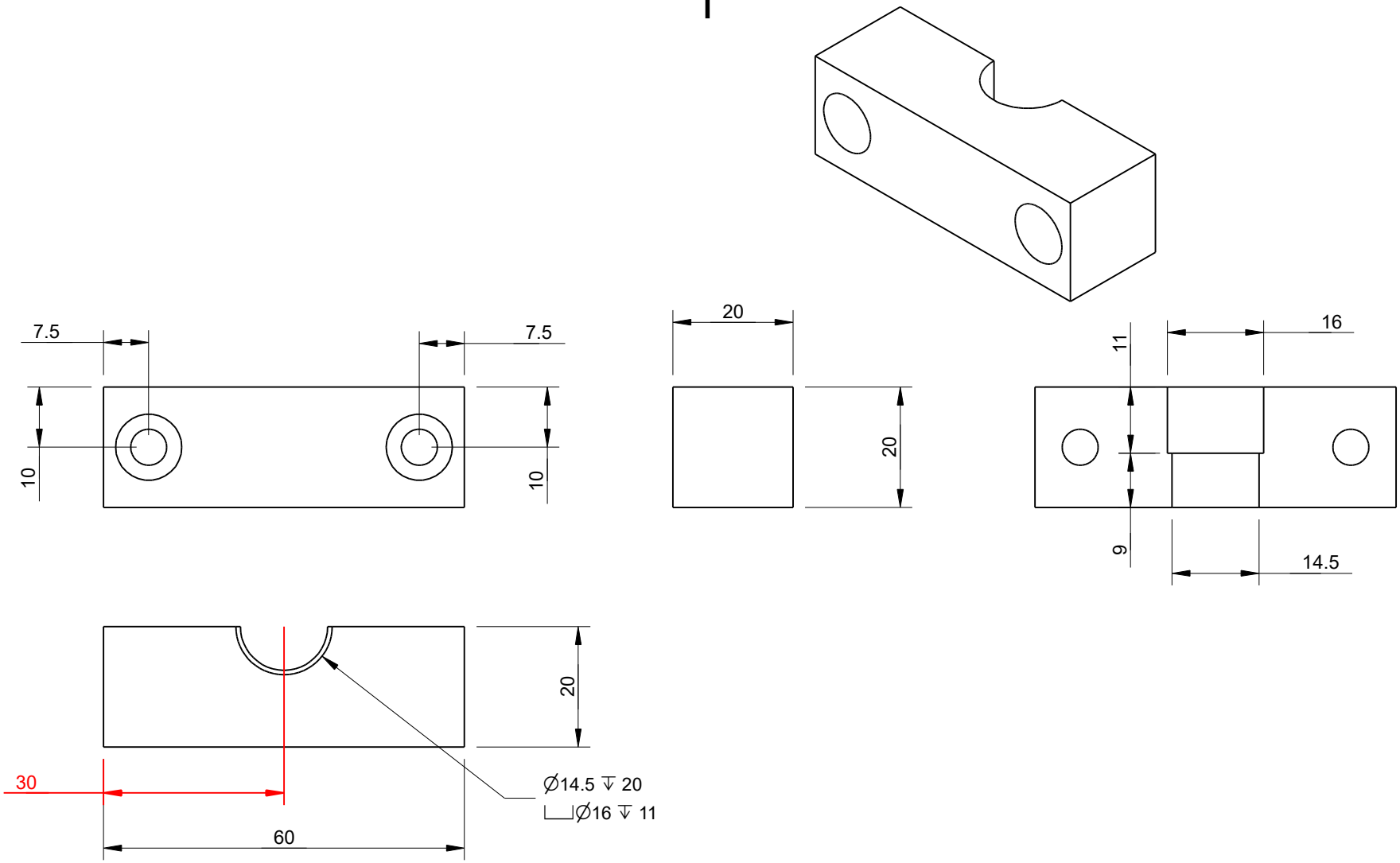

Itemref	Quantity	Title/Name, designation, material, dimension etc			Article No./Reference	
Drawn by		Checked by	Approved by - date	File name	Date	Scale 1:1
			Support nozzle 1400 - variable part 2		Edition	Sheet 1 OF 1