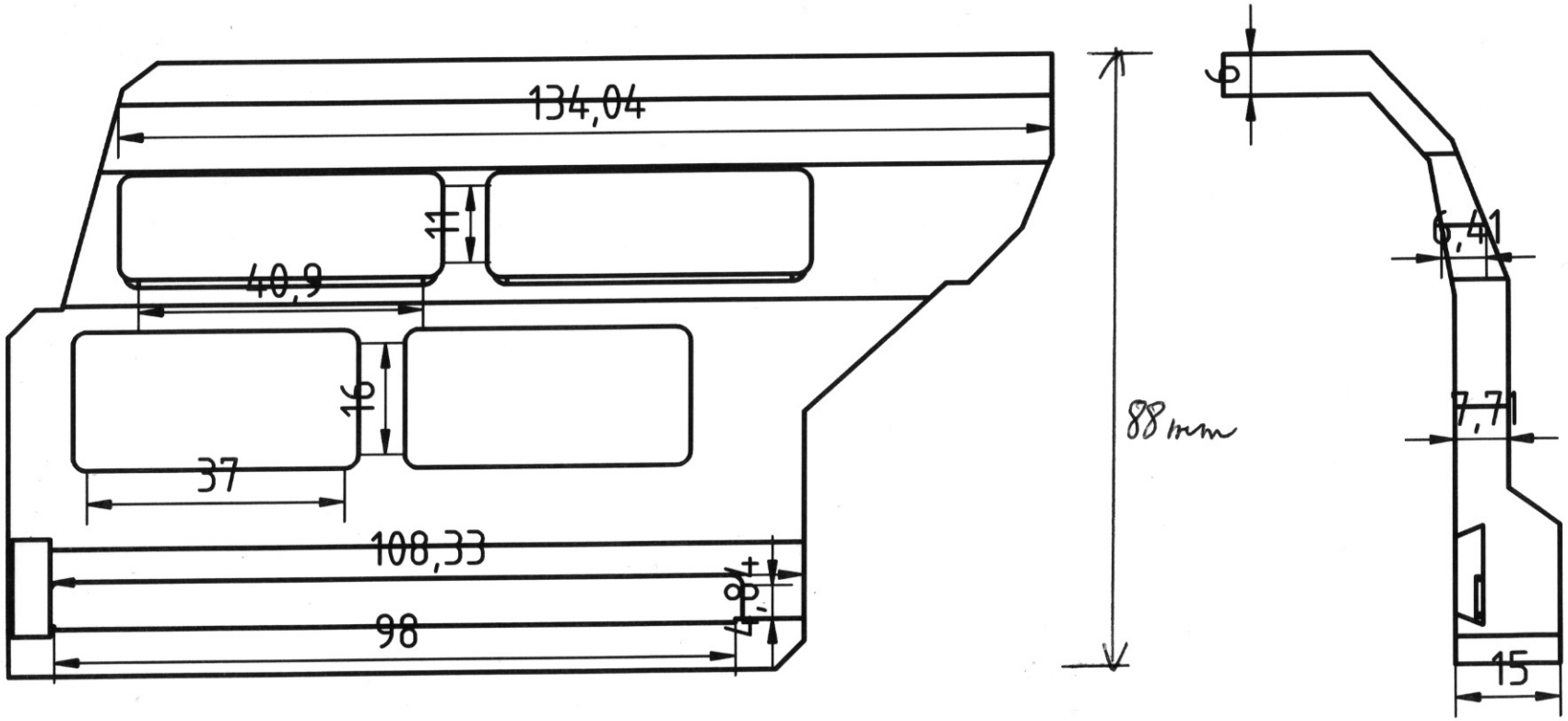

DESIGNED BY: Tiroptic		Fixation 2 page 1		
DATE: 20/08/2024				
SIZE A4				
SCALE	WEIGHT (kg)	DRAWING NUMBER N°2	SHEET Sheet	

This drawing is our property; it can't be reproduced or communicated without our written consent.