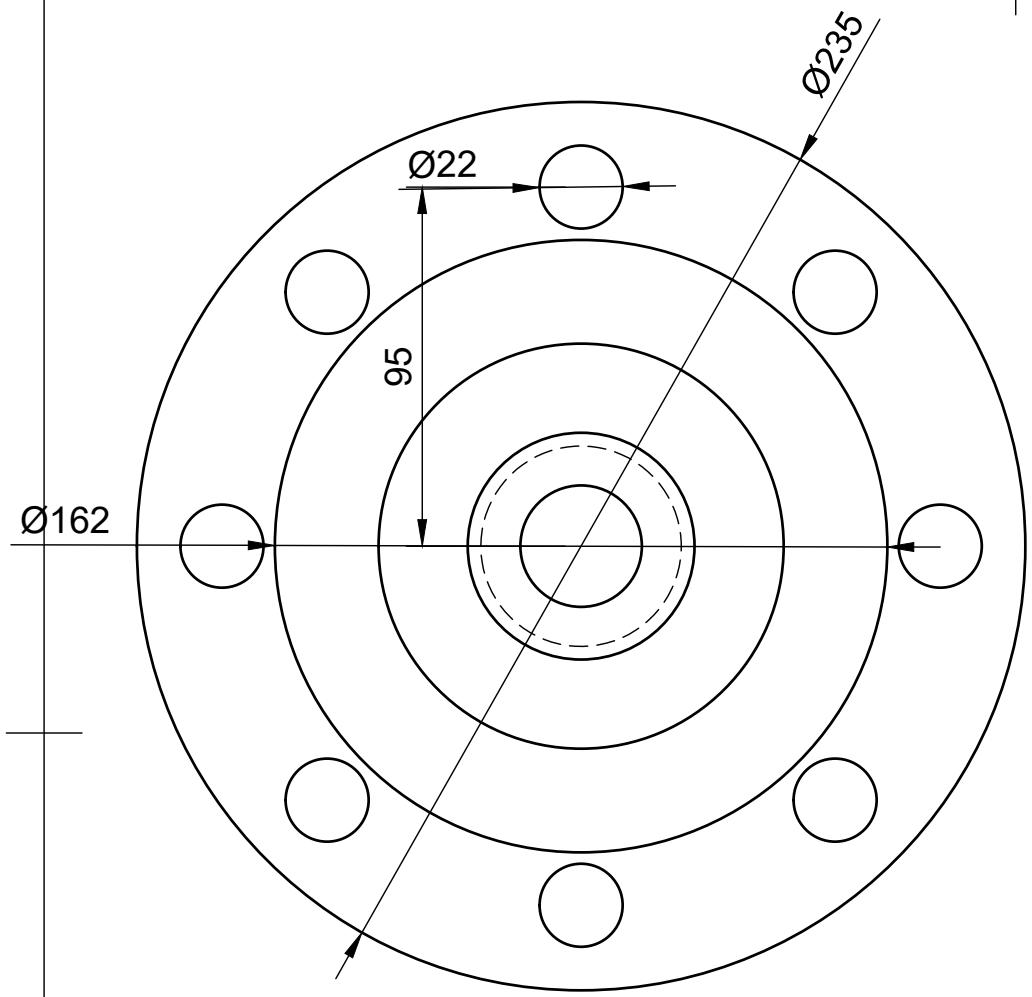

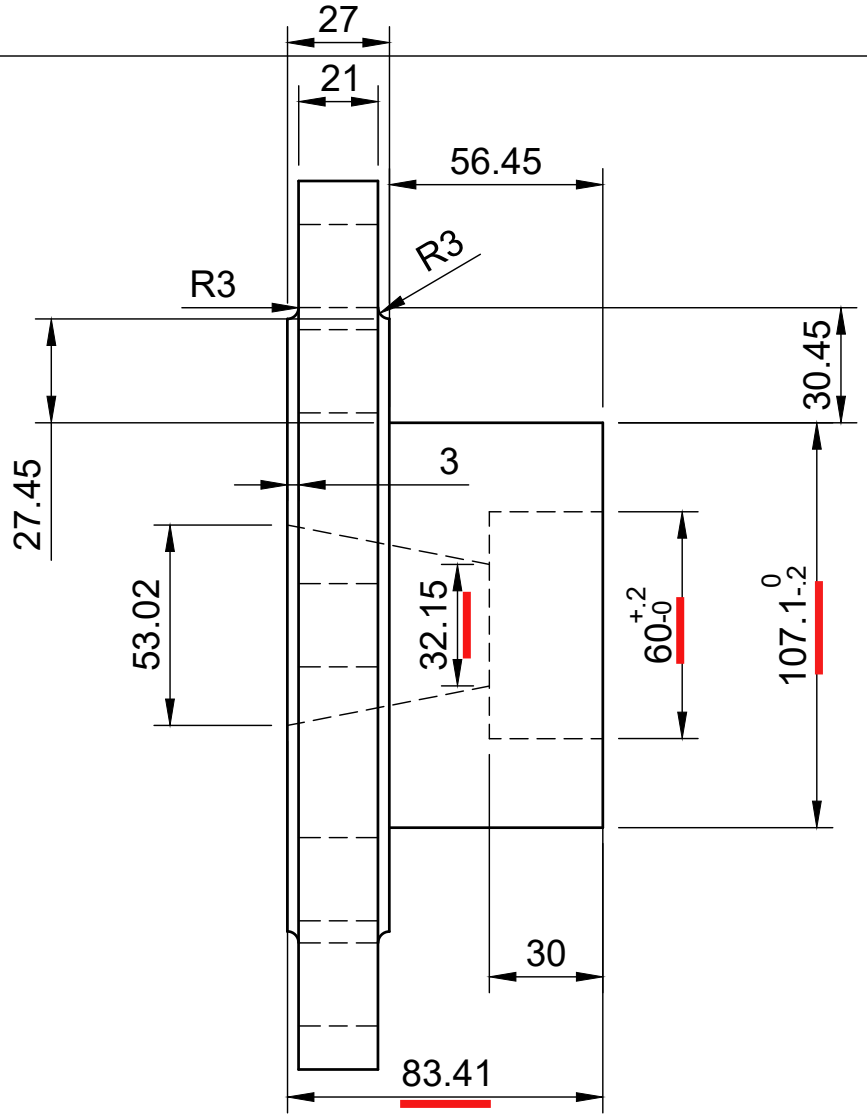

Dept.	Technical reference	Created by Guillaume Bailly 03/09/2023	Approved by	
		Document type	Document status	
		Title Tuyère acier	DWG No.	
			Rev. / Date of issue	Sheet 1/1