Material :

Aluminium 2017

Heat treatment :

Protection of surf :

Ra 1.6
Unless Otherwise Indicated

Suppression des bavures et angle tranchant | Removal of blurrs and sharp angle

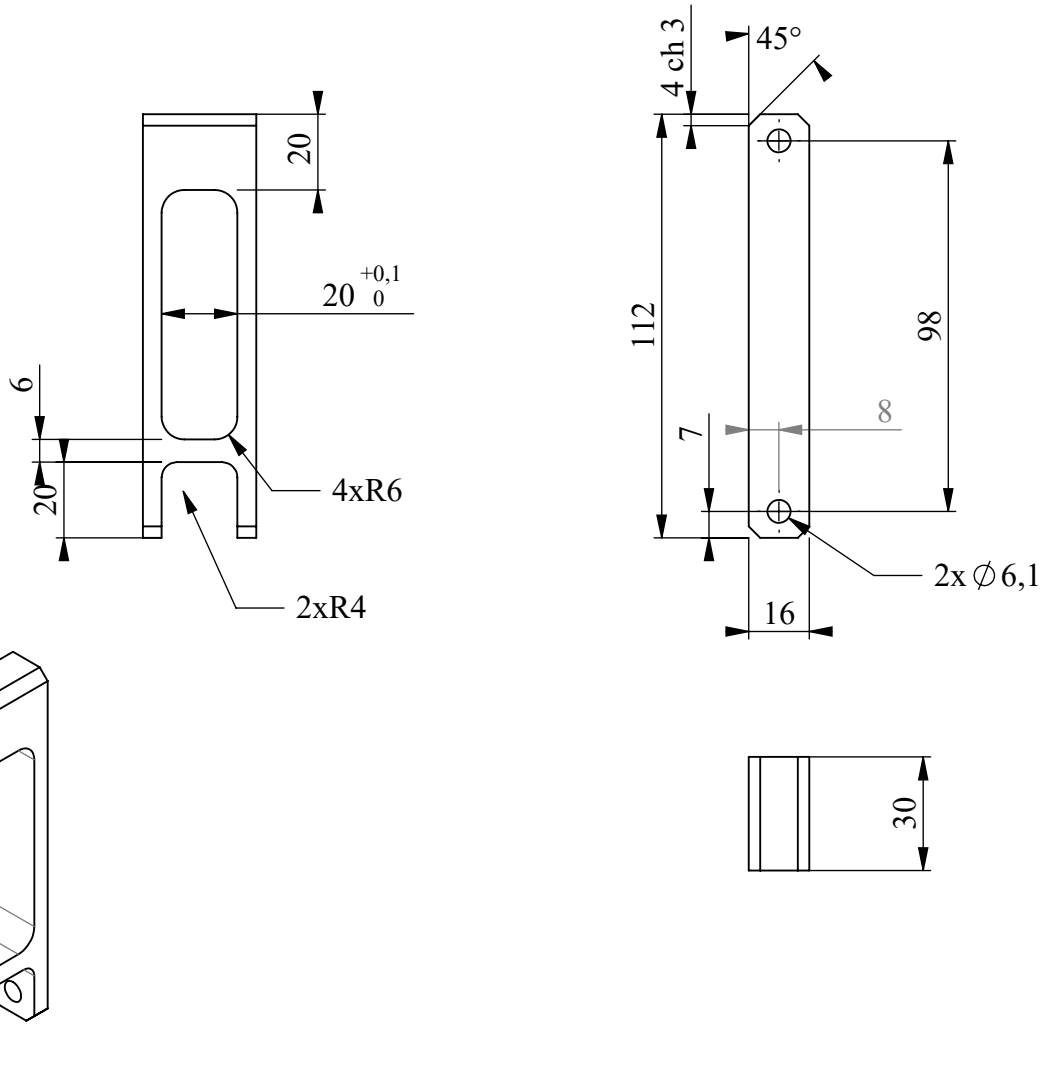

EXEPT OTHER INDICATION	Mod	Date	By	Modifications
General tolerances to be respected : ISO 2768 : m & k Welding : v Sheet Metal : v Mould : ISO 8062 Surface texture : ISO 1302 Welding Symbols : ISO 2553				

Mass (Kg) :

CAUTION :
All dimensions are in millimeters and projected view in ISO std

Legacy ID

MICHELIN

Ex sup pince2 I3D01061_00244_SEA

Rev :

Drawing Number

Toute copie imprimée de ce document n'est pas gérée
Propriété exclusive de notre société. Reproduction ou utilisation interdite sans notre accord écrit.
Any printed copy of this document is not managed
Exclusive property of our company. Reproduction or prohibited use without our written agreement.

DTM Class :

Size : A4 | Scale : 1:2 | Units :

Sheet : 1/1