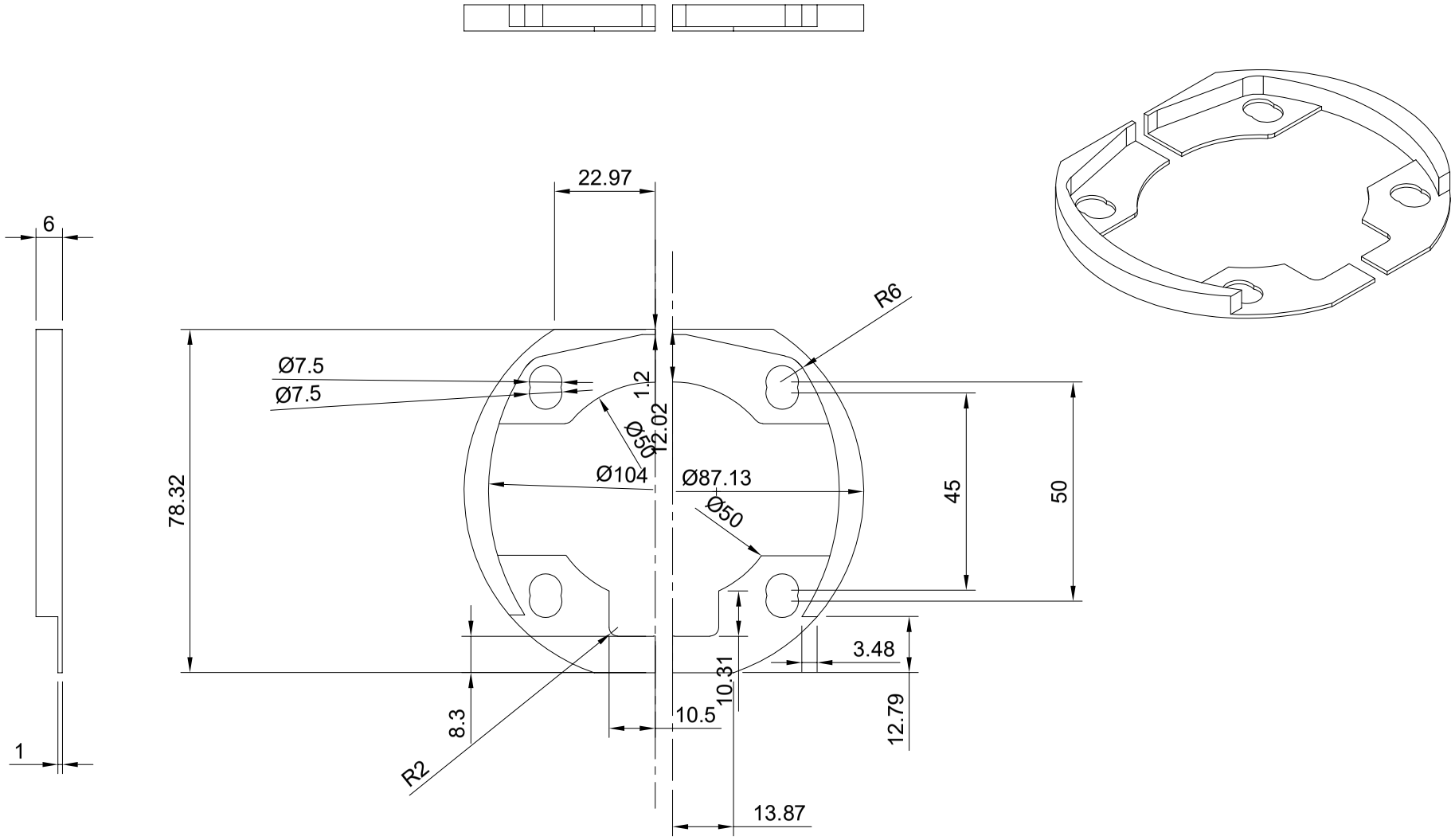

Dept.	Technical reference	Created by	Approved by
		L.L Services 02/11/2023	
		Document type	Document status
		Title: Joint embase carter Polini 103 cylindre Nitro	DWG No.
			Rev. / Date of issue / Sheet 1/1