REMARKS

Section view A-A
Scale: 1:1

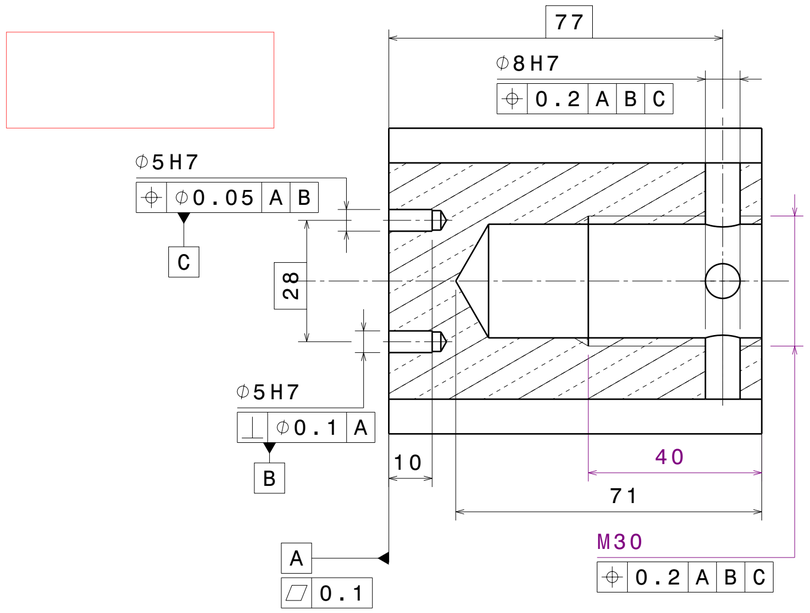

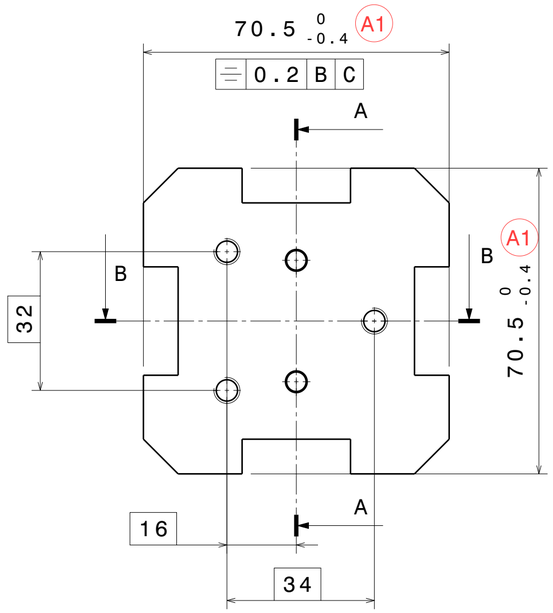

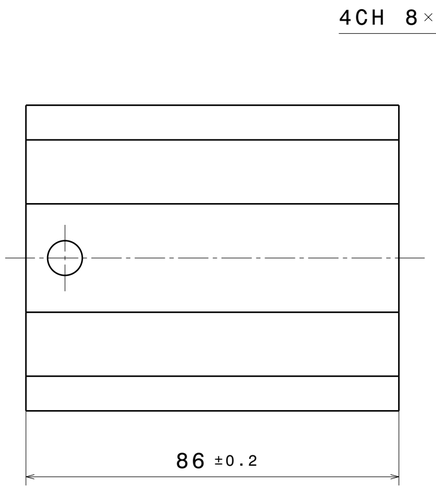

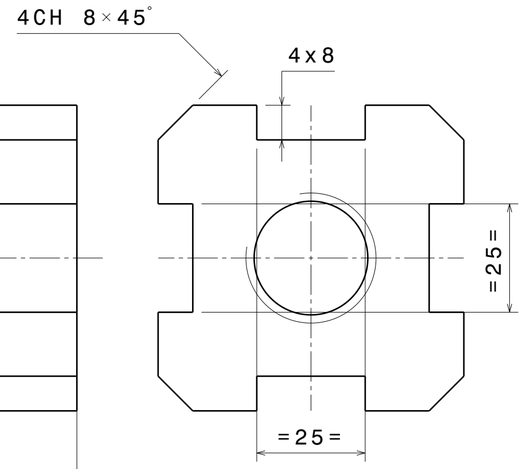

Section view B-B
Scale: 1:1

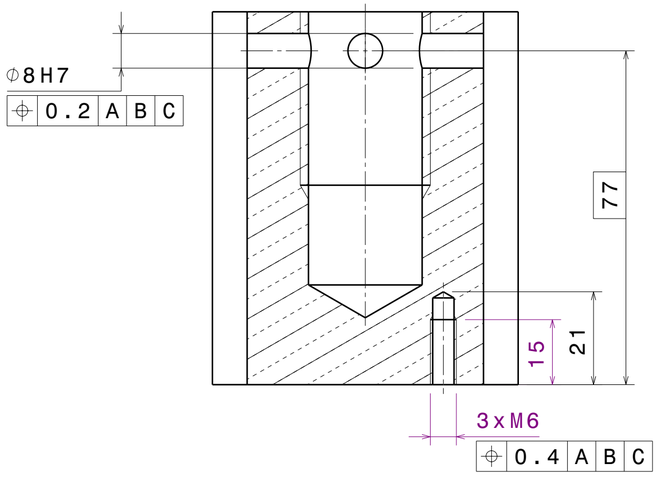

Isometric view
Scale: 1:2

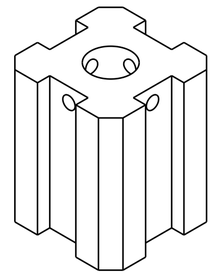

1830 QTE 1

BRONZE 88/12

Matière => 88/12
Tolérance => 0/-0.4