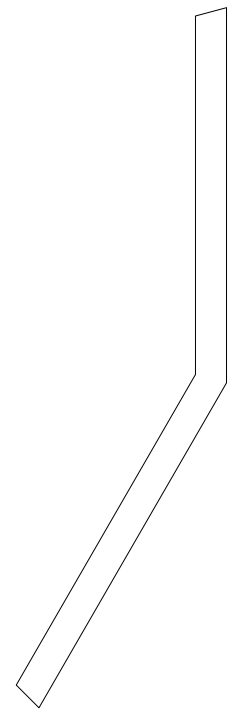

A-A (1:5)

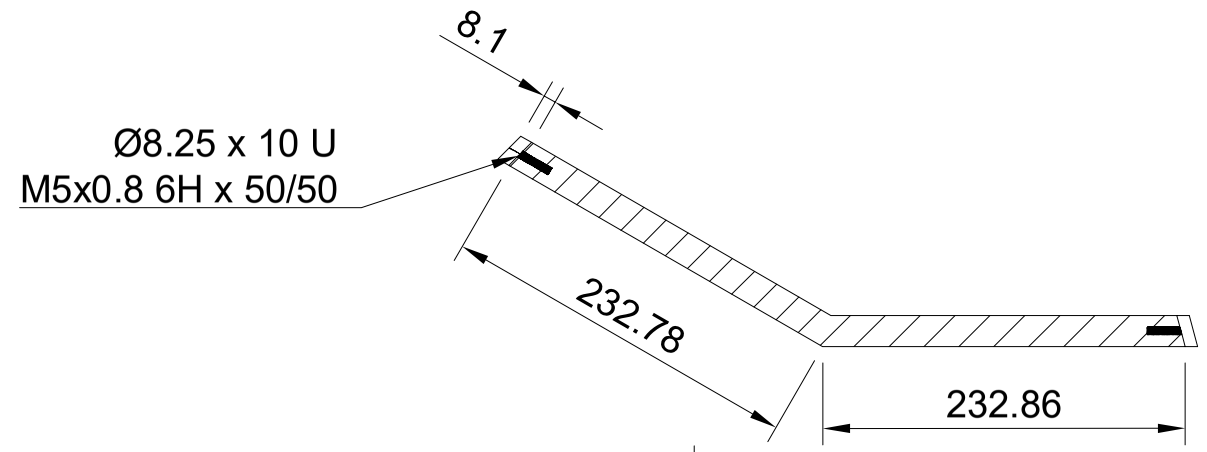

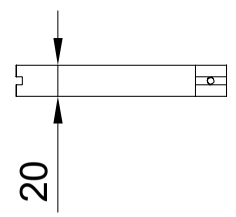

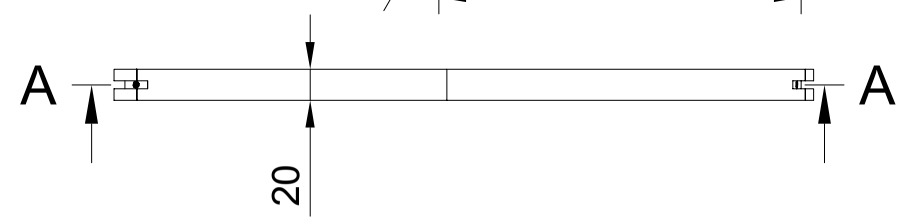

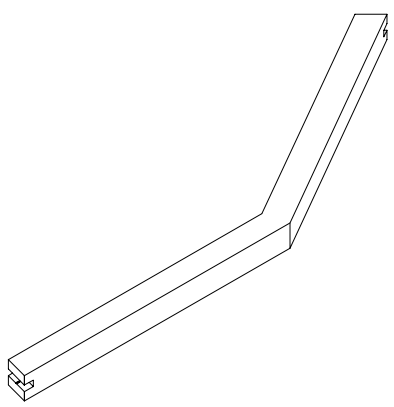

Dept.	Technical reference	Created by pean maurice 26/03/2023	Approved by
News hexagone2		Document type	Document status
		Title imprimante v2	DWG No.
			Rev. / Date of issue / Sheet 1/1