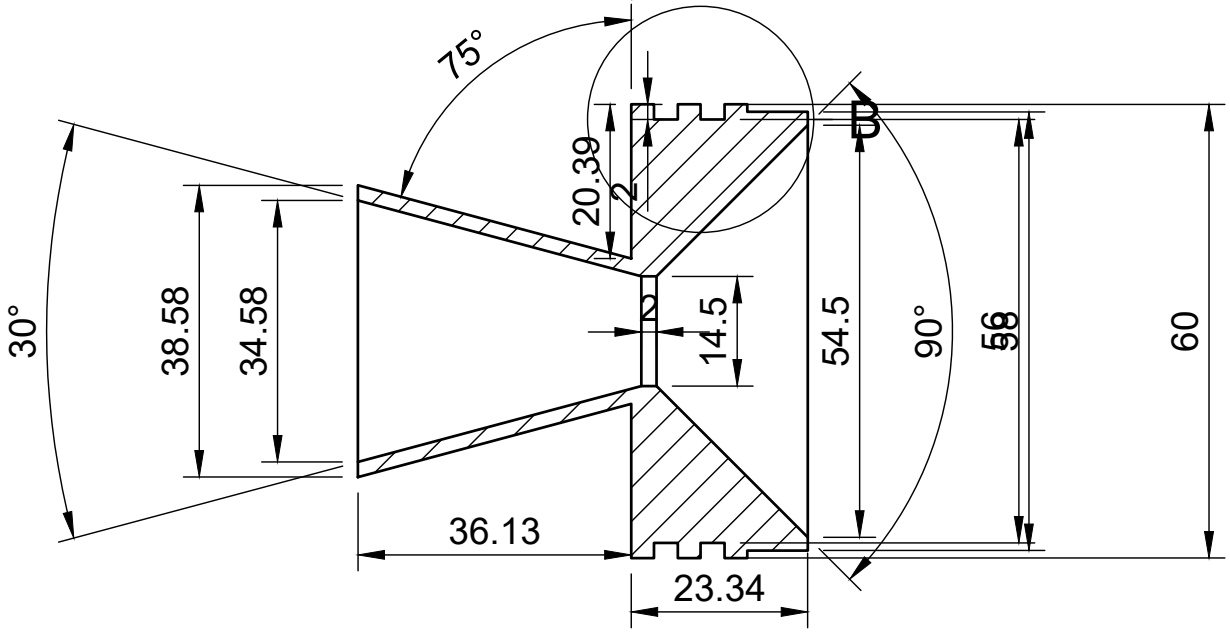
75°
30°
38.58
34.58
20.39
2
2
14.5
54.5
90°
56
58
60
36.13
23.34

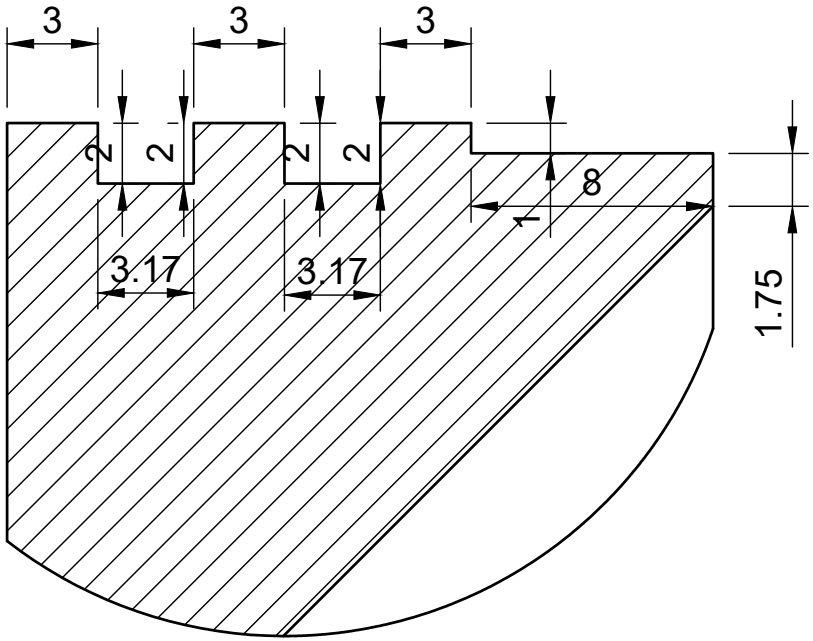
3
3
3
2
2
2
2
8
1
3.17
3.17
1.75