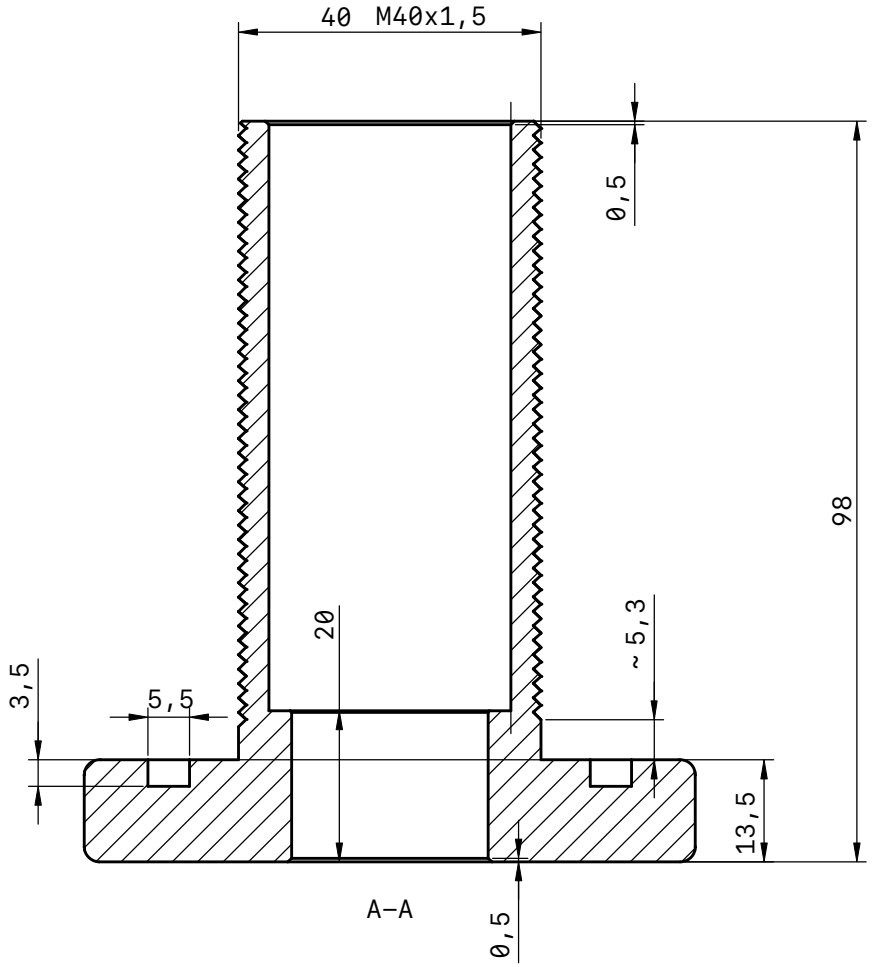

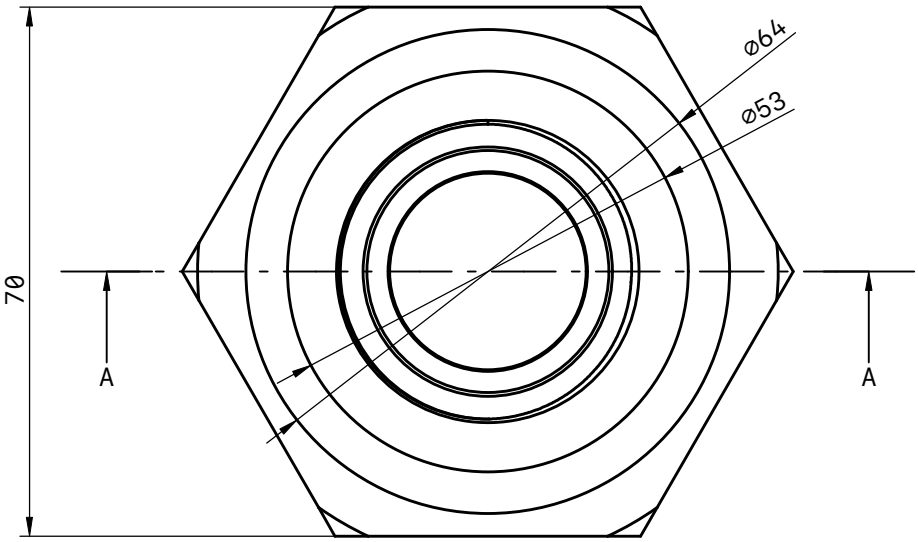

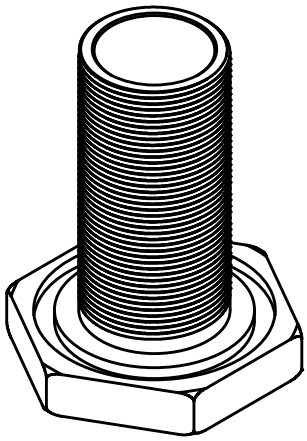

SCALE 1:2

matiere inox

TITLE vis		
LAST UPDATED 02/07/23	UNITS mm	SHEET 1 / 1
FIRST ANGLE PROJECTION	SCALE 1:1	SIZE A4