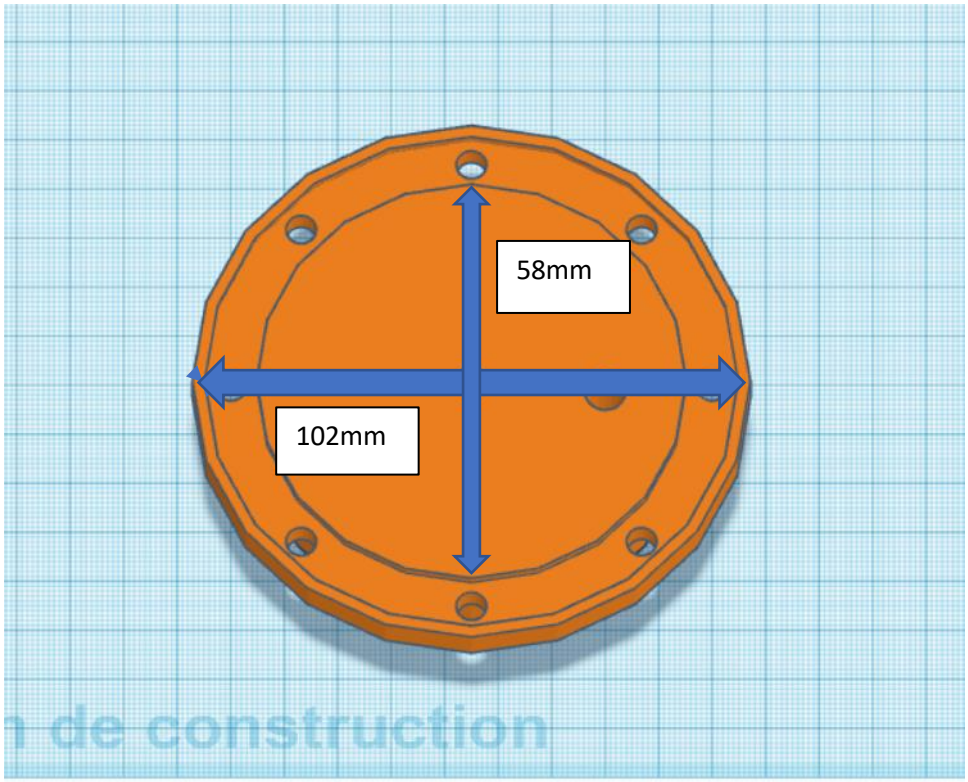
58mm
102mm
n de construction

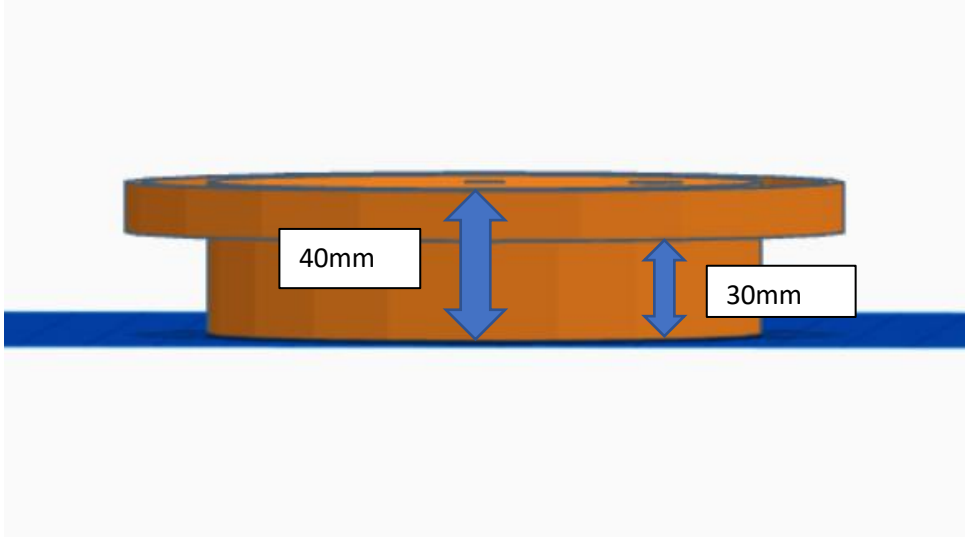
40mm
30mm

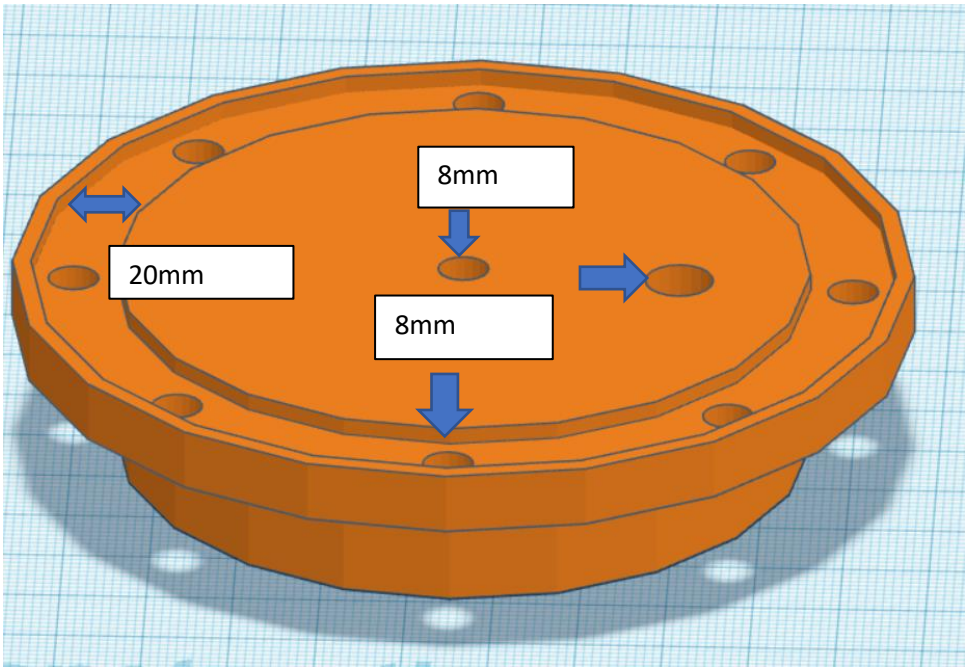
8mm
20mm
8mm

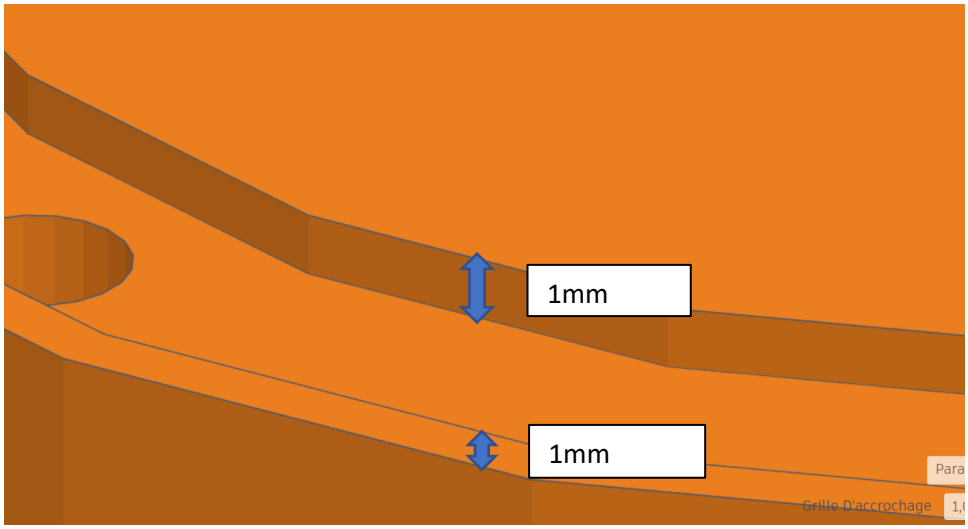
1mm
1mm
Grille D'accrochage