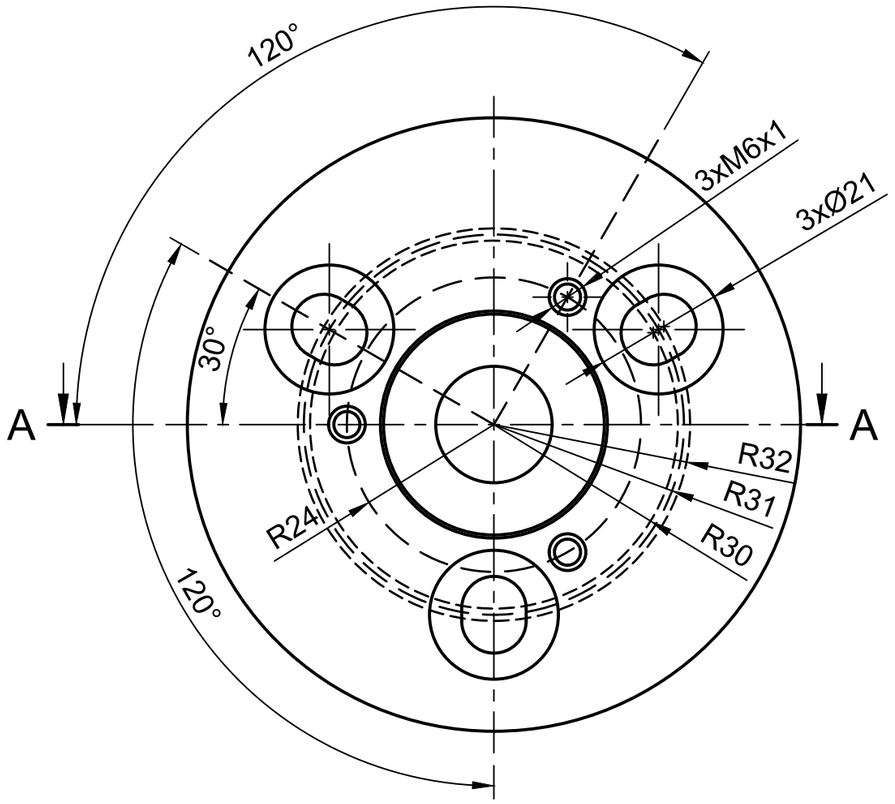

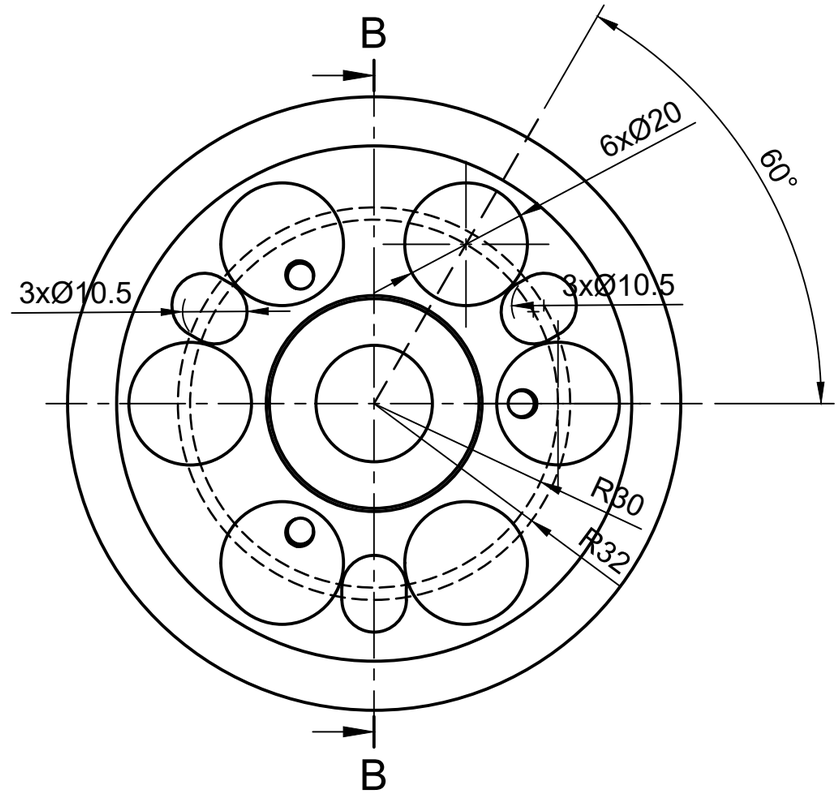

B-B (1:1)

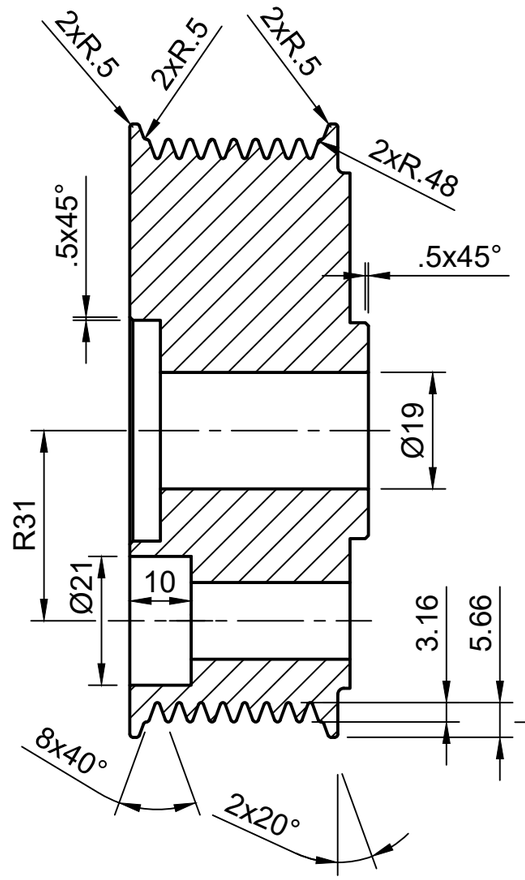

A-A (1:1)

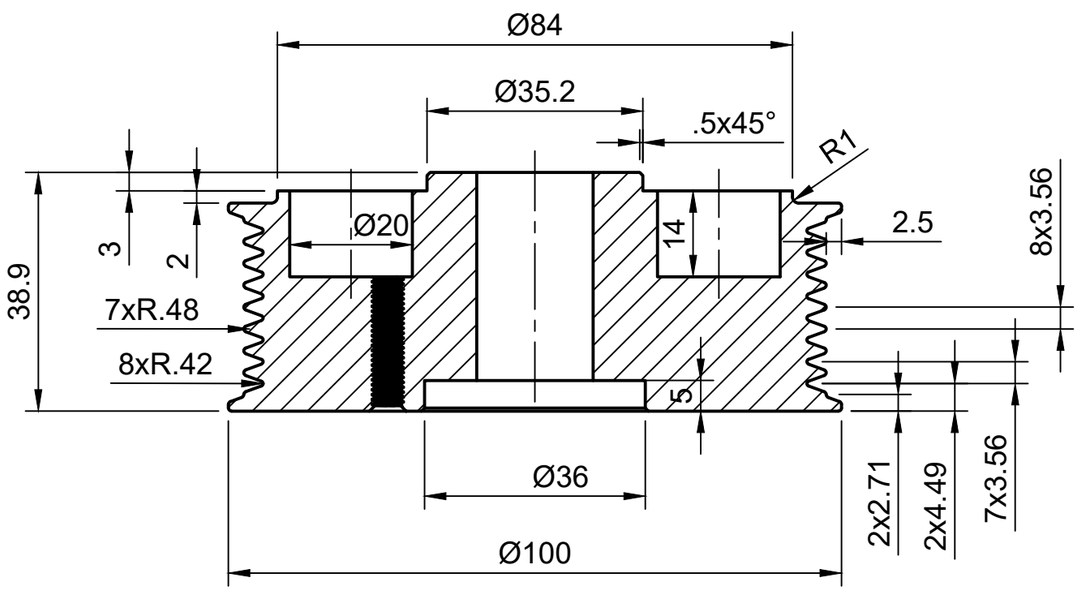

GEO TECHNOLOGY SA
F6701 - L4 DRIVE PULLEY
phi 95mm with AVL encoder