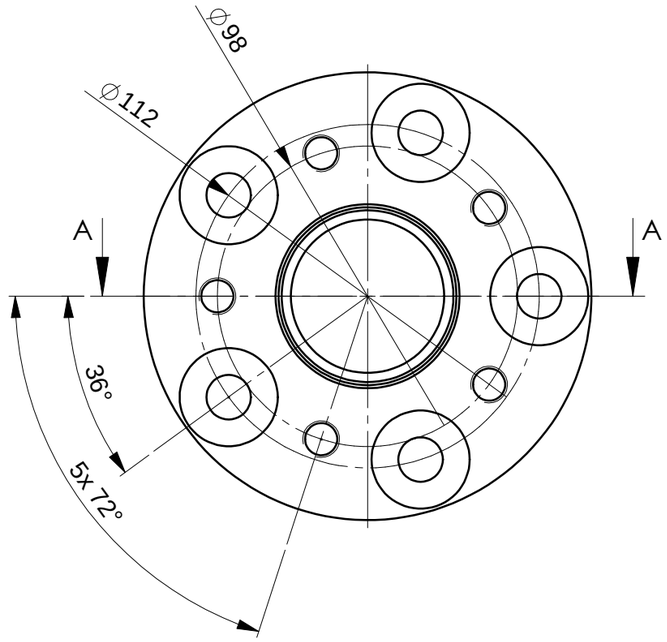

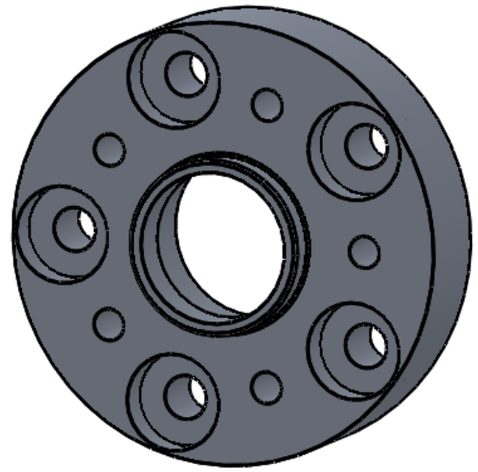

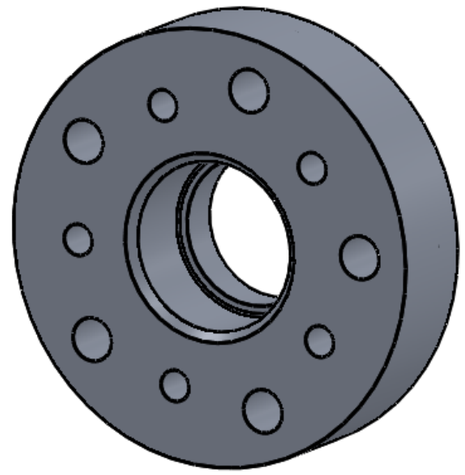

COUPE A-A

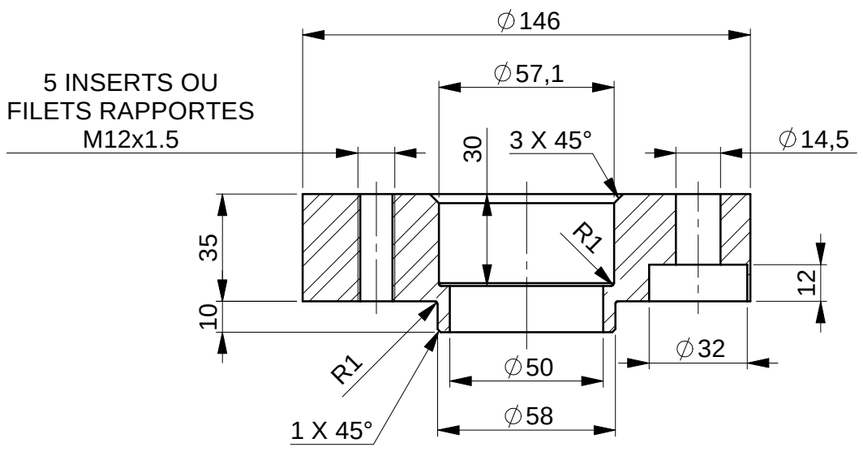

A	First Issue / 1ere Diffusion				
REV	MODIFICATIONS	DATE	REV. BY	CHECKED BY	
SPEC.					

ORDER / COMMANDE	DATE / DATE	PIECE / PIECE

DESCRIPTION

DESCRIPTION CALE JANTE POUR AUDI

DIMENSION-1 / Surface Treatment/Traitement de surface	SPECIFICATION-1 / Matière		SPECIFICATION-5		
	ALUMINIUM				
FORMAT/FORMAT A3	DATE/ DATE	DESIGNED BY / DESSINE PAR	SCALE/ ECHELLE	WEIGHT/ MASSE 1:2	REF.ITEM NR. / REF.ARTICLE
	EXECUTION / EXECUTION	CHECKED BY/ CONTROLE PAR	ITEM NUMBER ARTICLE NUMERO		Rev
	SECURITY LEVEL / NIVEAU DE SECURITE	GENERAL TOLERANCES / TOLERANCES GENERALES			

THIS DRAWING AND ITS DESIGN ARE THE PROPERTY OF POMA. DUPLICATIONS WITHOUT PERMISSION ARE PROHIBITED.