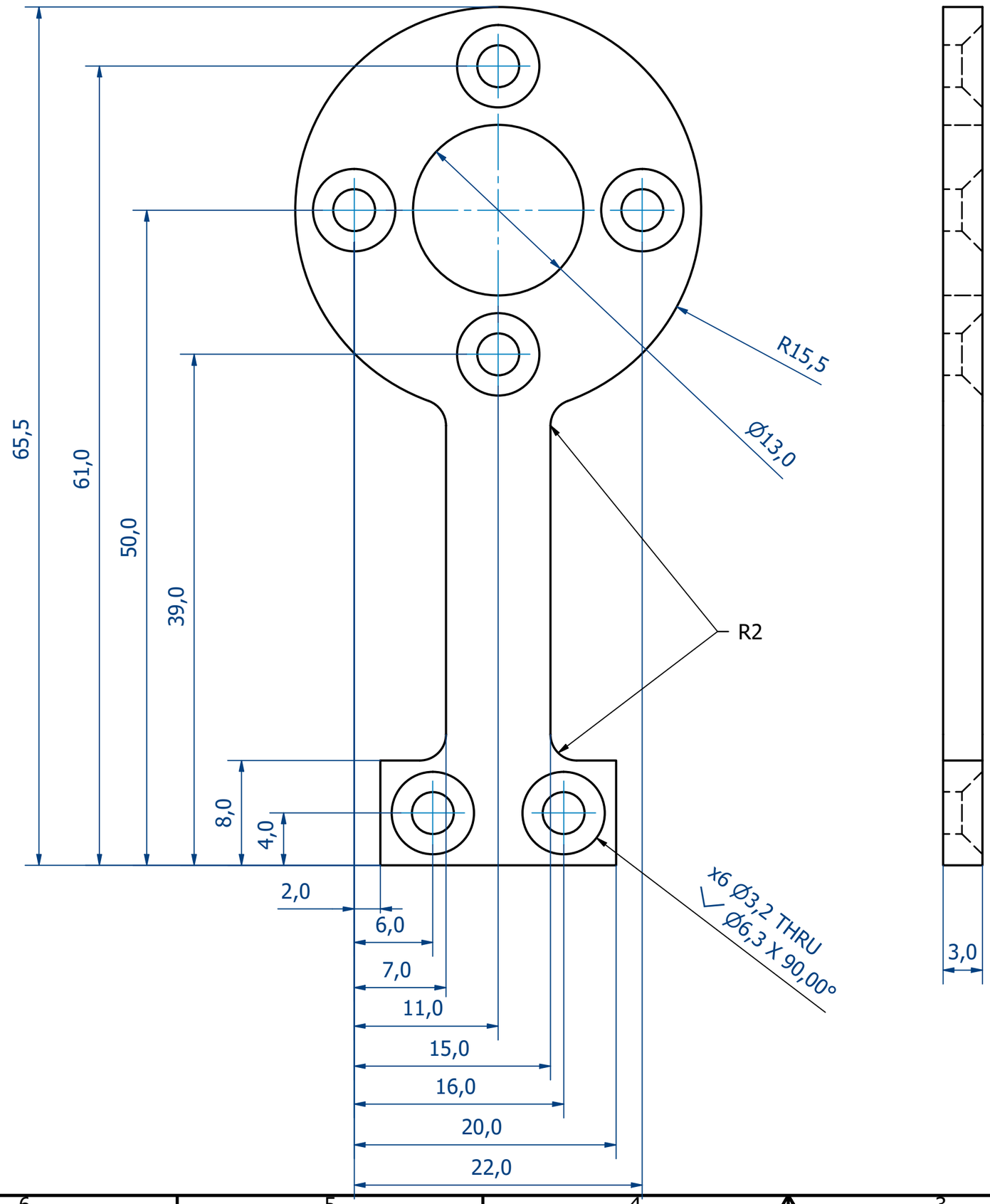

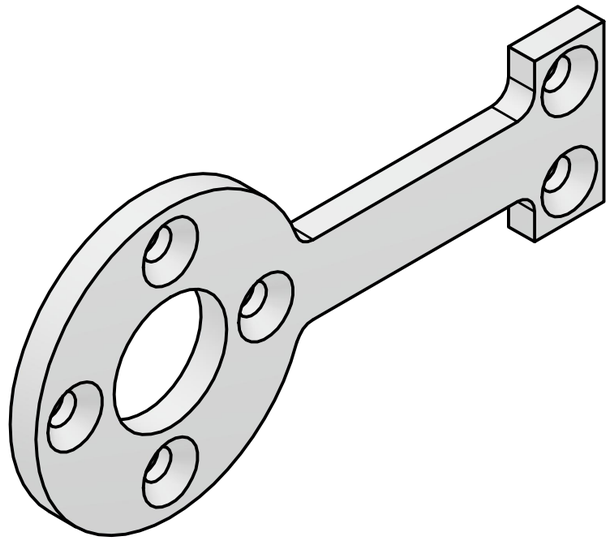

(*): 100% Dimension control

Casser les arrêtes vives
Se référer au fichier 3D Step si besoin

Edges: ISO 13715

-0.1 0 +0.1 0

General Tolerances: ISO 2768 fH (except when specified) General Surface Roughness: Ra = 1.6 max (except when specified)			**Date:** 15/09/2022
All dimensions in mm	**Scale** 3 : 1		**Material:** Aluminum 6061-T6 **Treatment:**
Drawing number CO-MEC-GSE-0045-01(A)			**Sheet format** A3
			Page 1/1