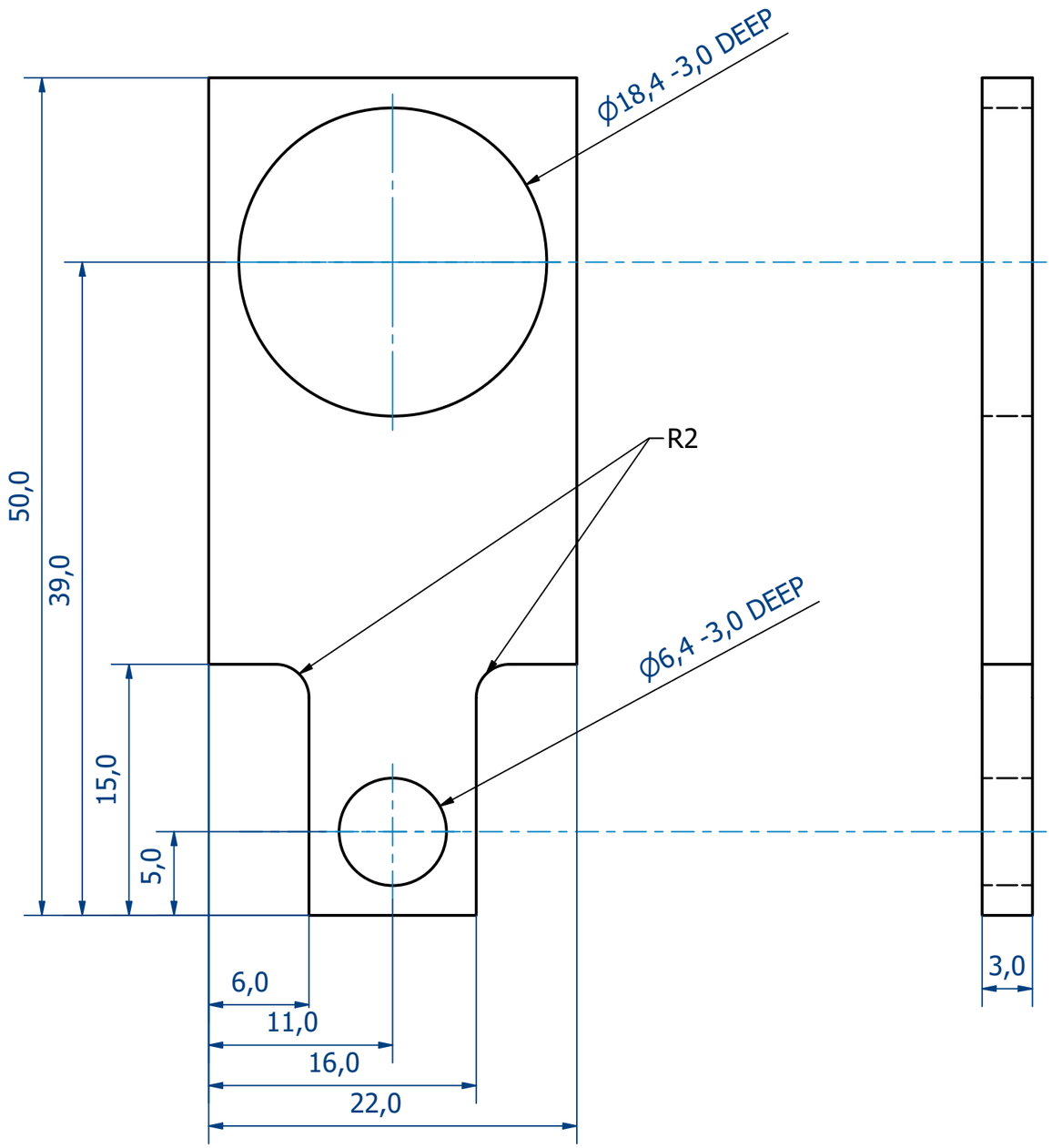

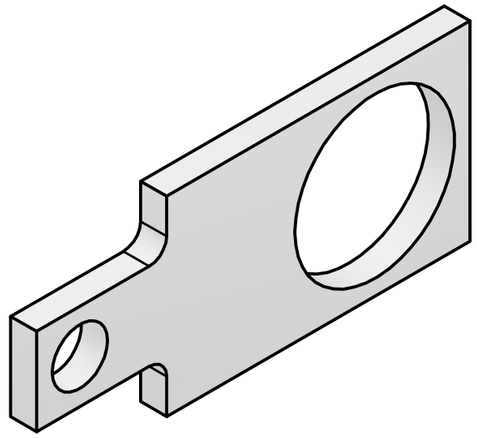

Edges: ISO 13715

-0.1
0

+0.1
0

(*): 100% Dimension control
Casser les arrêtes vives
Se référer au fichier 3D Step si besoin

General Tolerances: ISO 2768 fH (except when specified) **General Surface Roughness:** Ra = 1.6 max (except when specified)		**Drawing Author:** Louis PETITJEAN **Date:** 15/09/2022
All dimensions in mm	**Scale** 3 : 1	**Material:** Aluminum 6061-T6 **Treatment:**
exotrail	**Drawing Number** CO-MEC-GSE-0055-01 (A)	**Sheet format** A3 **Page** 1/1