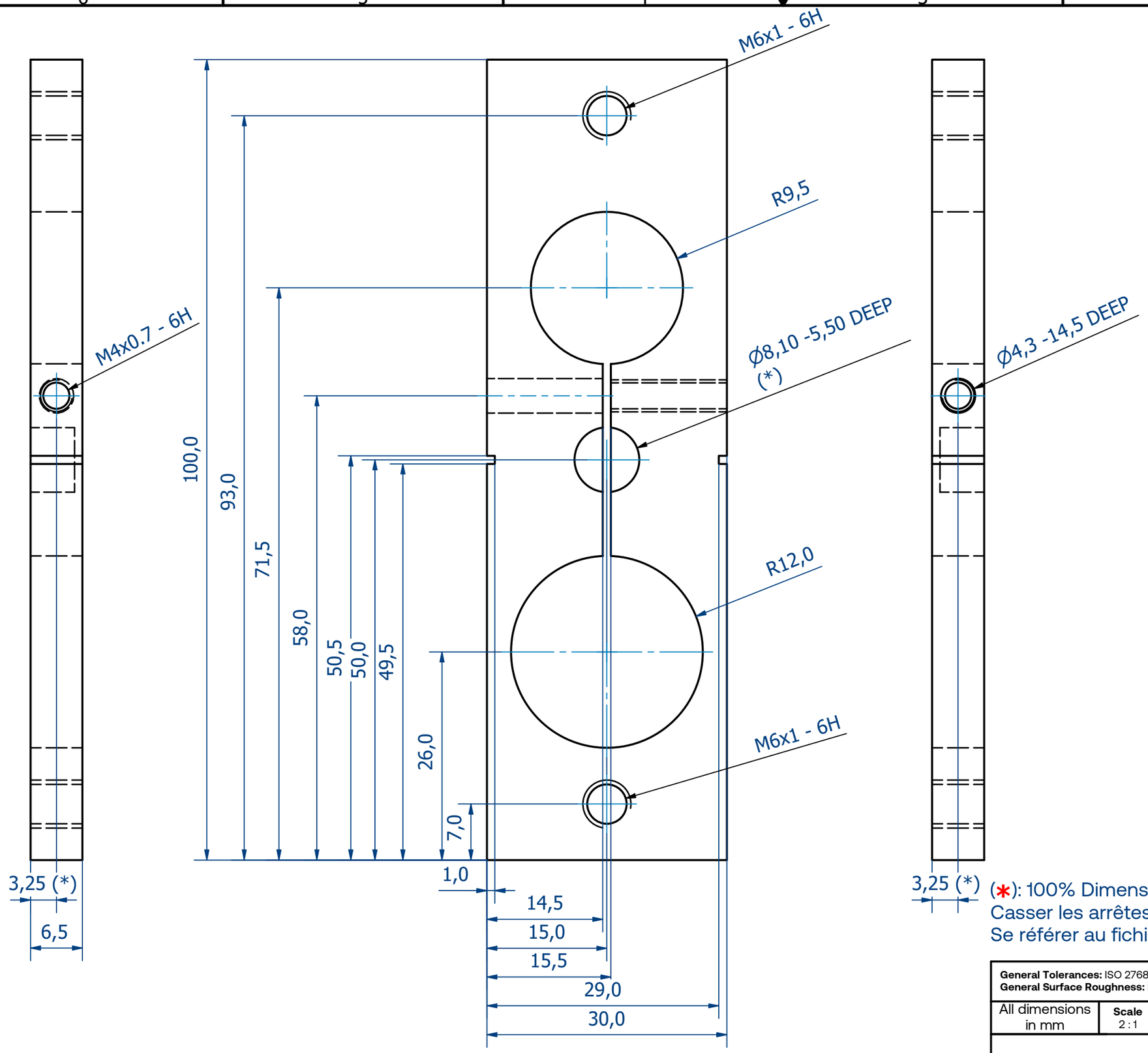

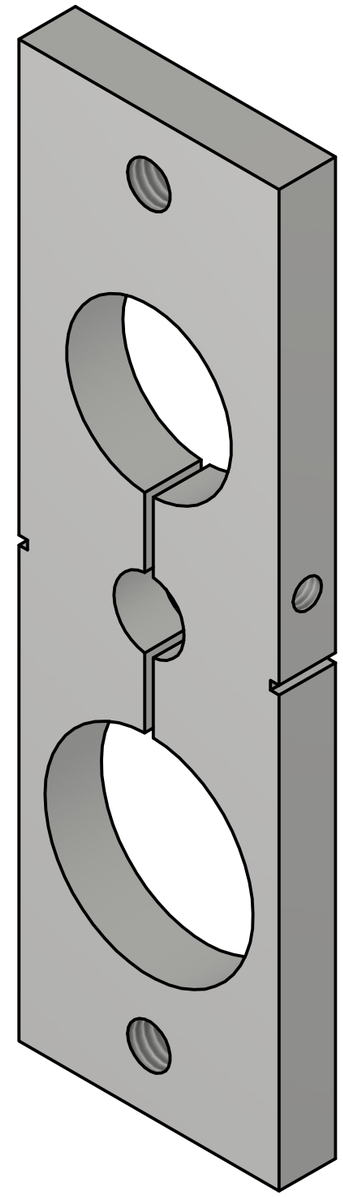

Edges: ISO 13715

-0.1 0 +0.1 0

(*): 100% Dimension control precision
Casser les arrêtes vives
Se référer au fichier 3D Step si besoin

General Tolerances: ISO 2768 fH (except when specified) **General Surface Roughness:** Ra = 1.6 max (except when specified)		**Drawing Author:** Louis PETITJEAN **Date:** 15/09/2022	
All dimensions in mm	**Scale** 2 : 1	**Material:** Aluminium 6061 **Treatment:**	
exotrail		**Drawing Number** CO-MEC-GSE-0060-01 (A)	**Sheet format** A3
		CO-MEC-GSE-0060-01	**Page** 1/1