REVISION HISTORY

REV	DESCRIPTION	INCORP BY	DATE	CHECKED

NOTES:

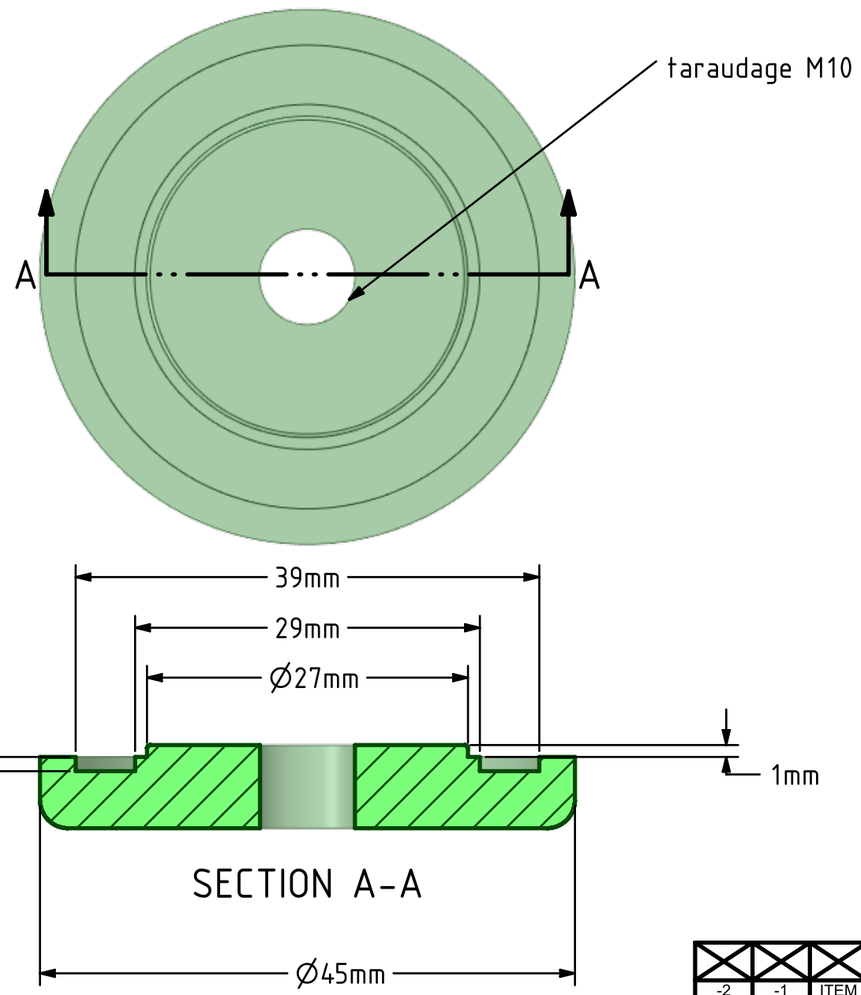

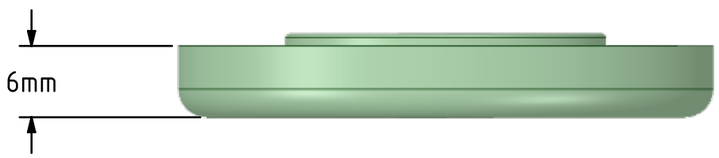

-2 QTY REQD	-1 QTY REQD	ITEM NO.	PART OR IDENTIFYING NO.	NOMENCLATURE OR DESCRIPTION

PARTS LIST

INIT	APPROVALS	DATE	INIT	APPROVALS	DATE

CONTRACT NO.

MATERIAL

FINISH

TREATMENT

SIMILAR TO

THIRD ANGLE PROJECTION

NEXT ASSY | USED ON

APPLICATION

TITLE

SIZE	CAGE CODE	DWG NO.	REV
B			

SCALE | SHEET