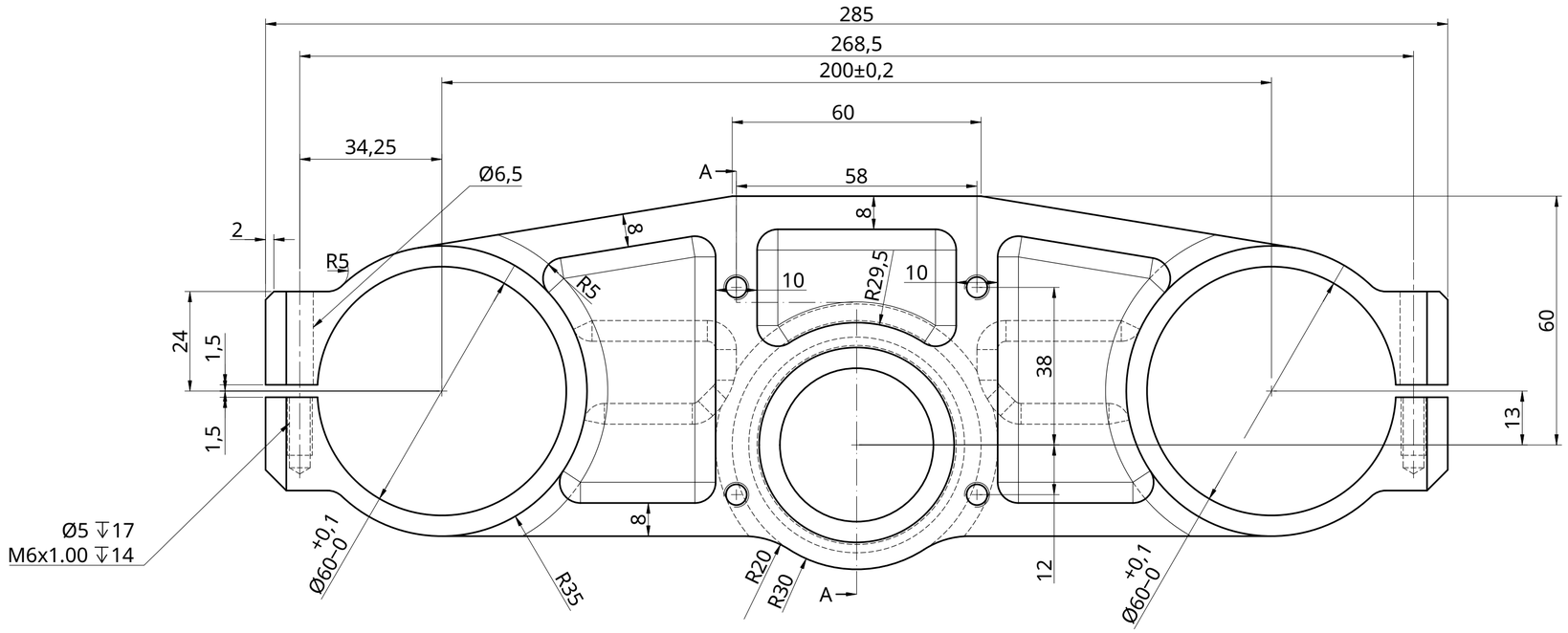

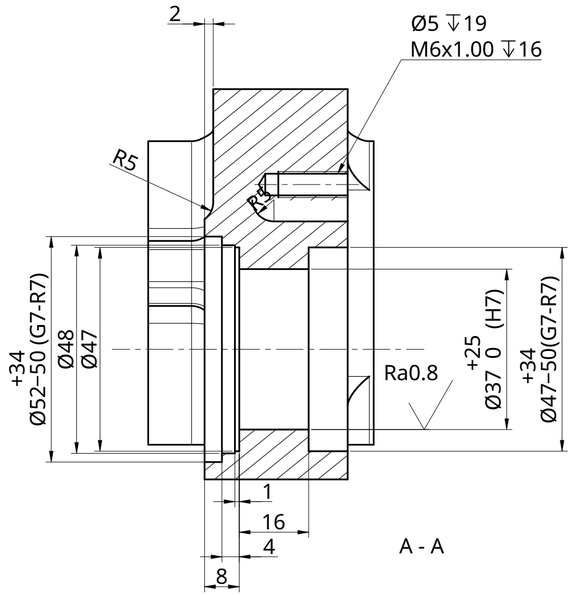

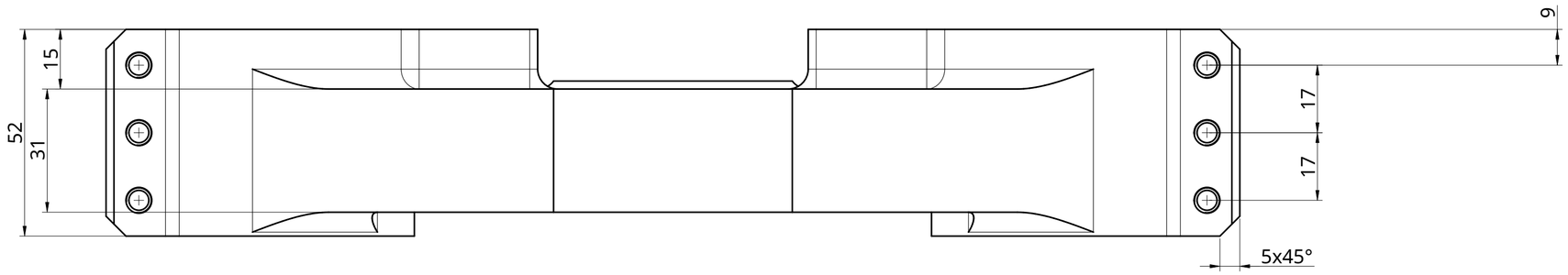

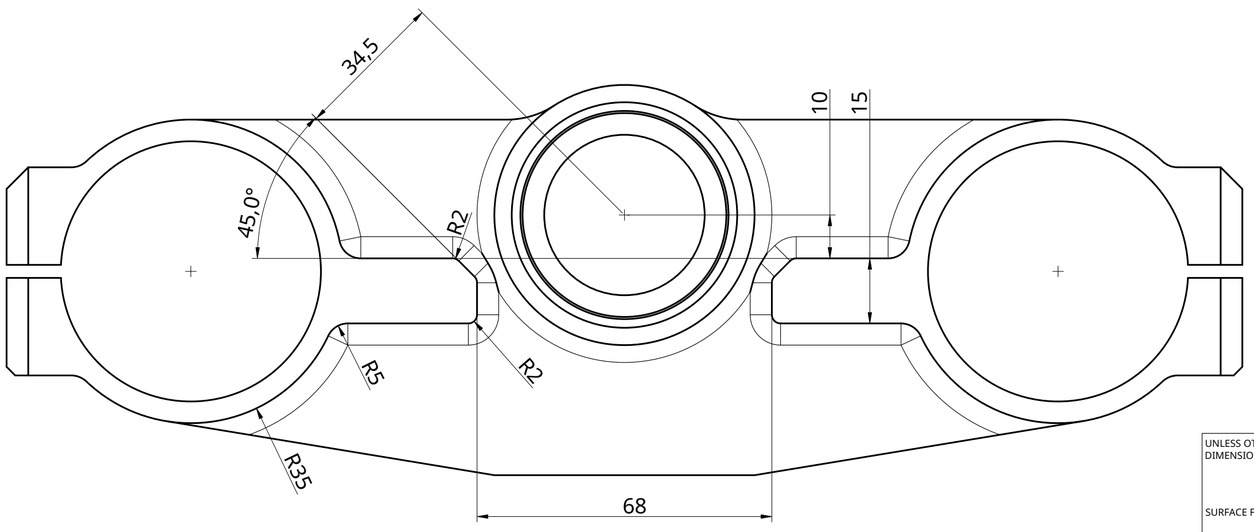

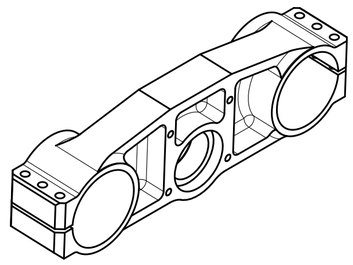

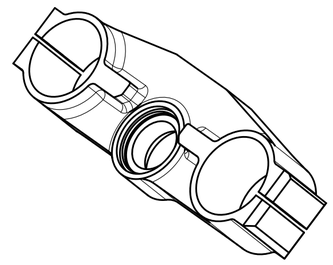

UNLESS OTHERWISE SPECIFIED, DIMENSIONS ARE IN MILLIMETERS		NAME	SIGNATURE	DATE
ANGULAR = ± °	DRAWN	GILLES GOOSSE		2022-07-27
SURFACE FINISH	CHECKED			
	APPROVED			
DO NOT SCALE DRAWING				
BREAK ALL SHARP EDGES AND REMOVE BURRS				
FIRST ANGLE PROJECTION	MATERIAL		FINISH	

TITLE

SIZE A2	DWG NO.	REV.
SCALE 1:1	WEIGHT	SHEET 1 of 1