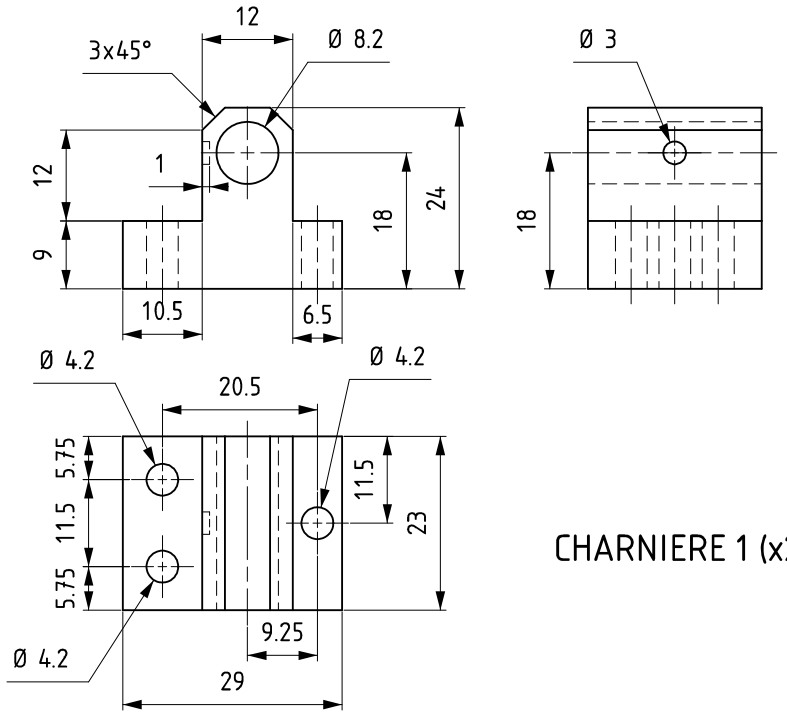

CHARNIERE 1 (x2)

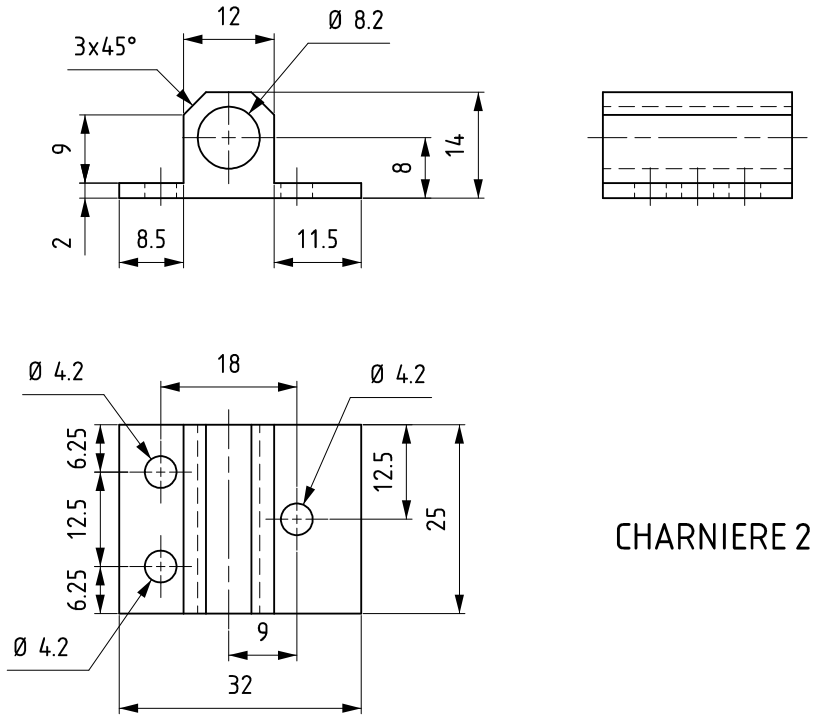

CHARNIERE 2 (x4)

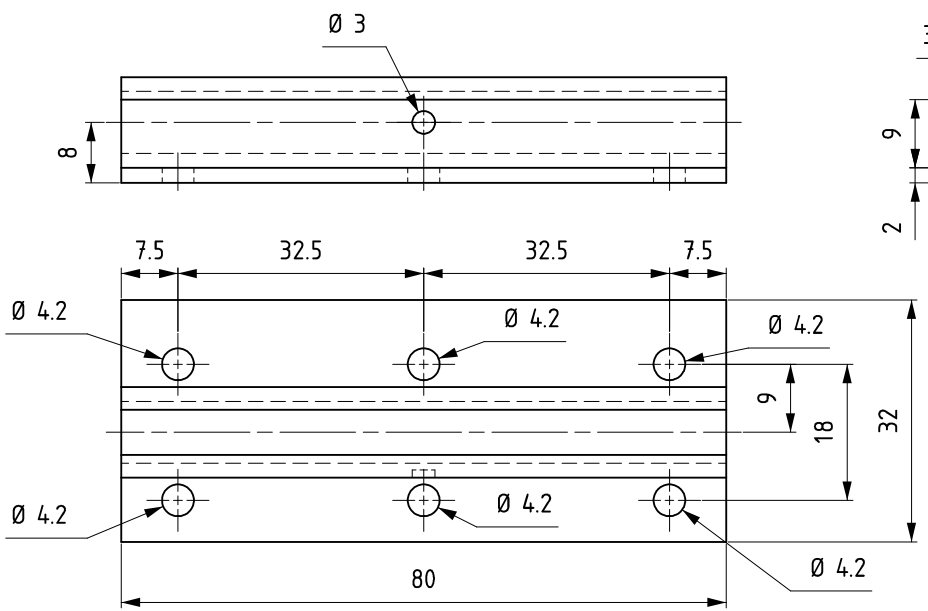

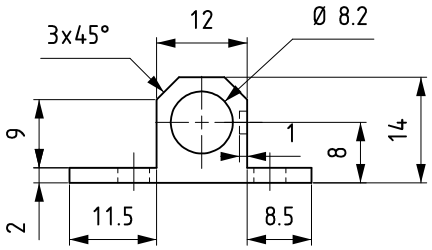

CHARNIERE 3 (x4)