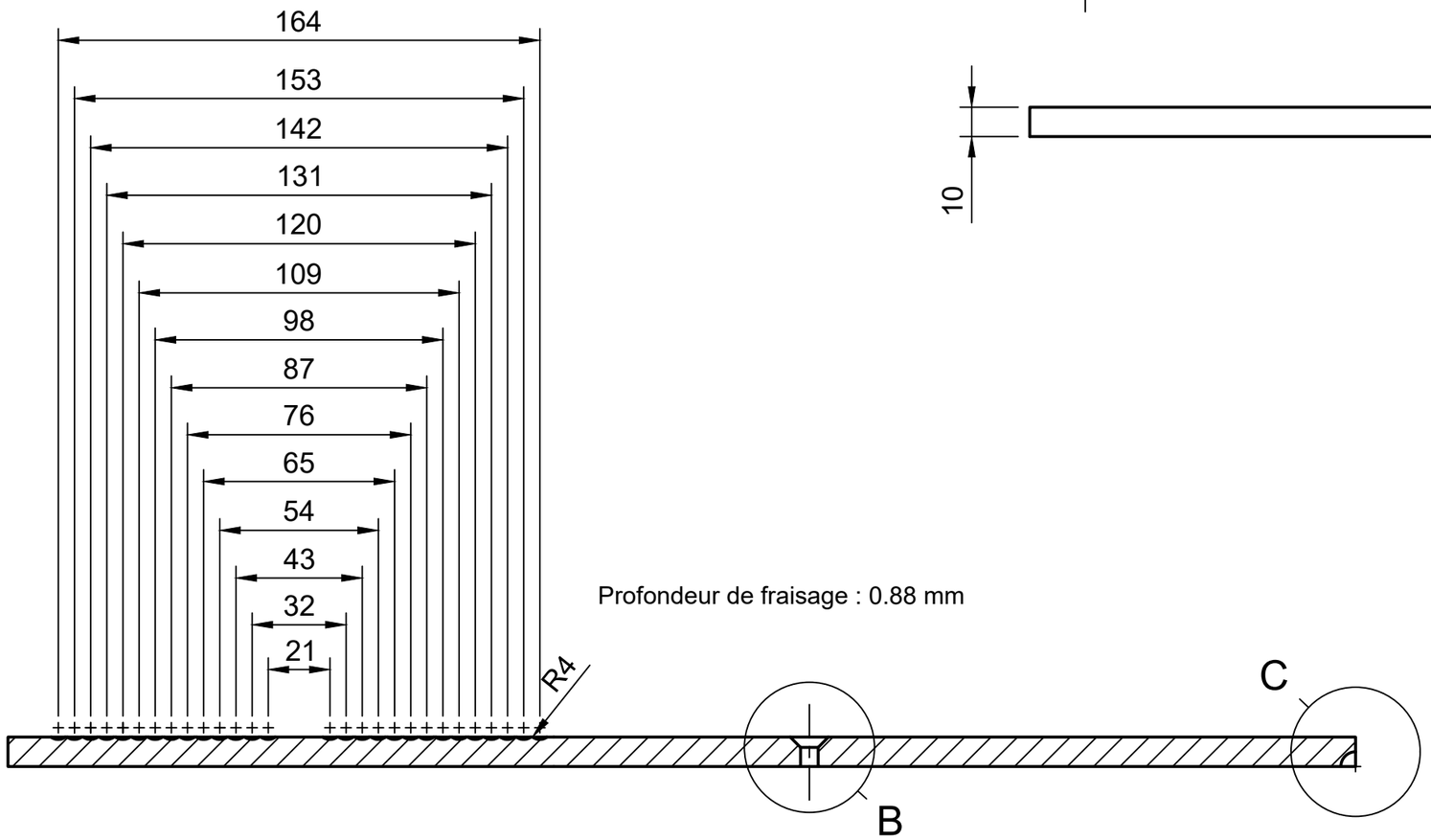

A-A (1:2)

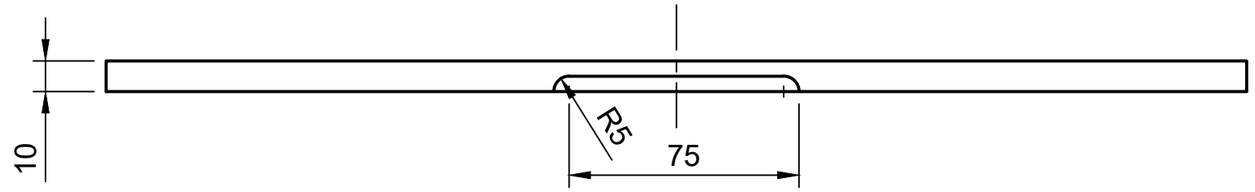

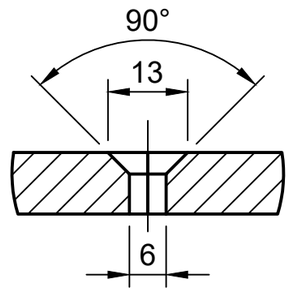

B (1:1) 5x

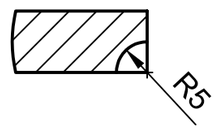

C (1:1)

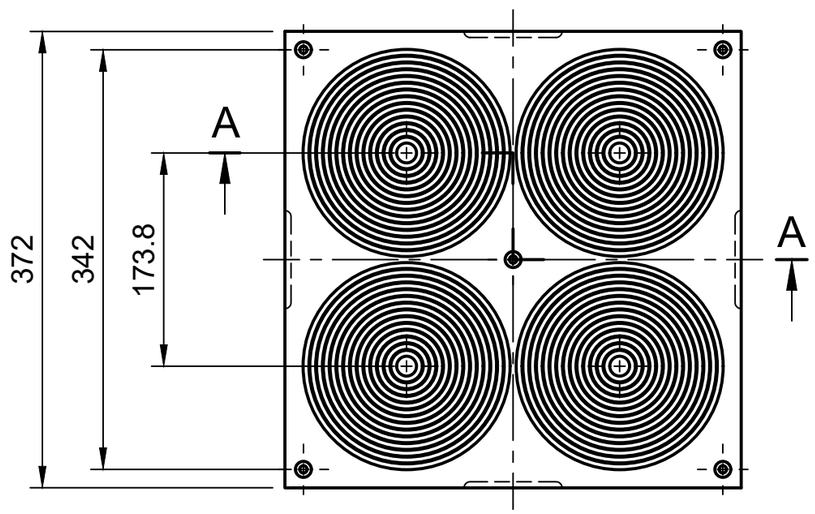

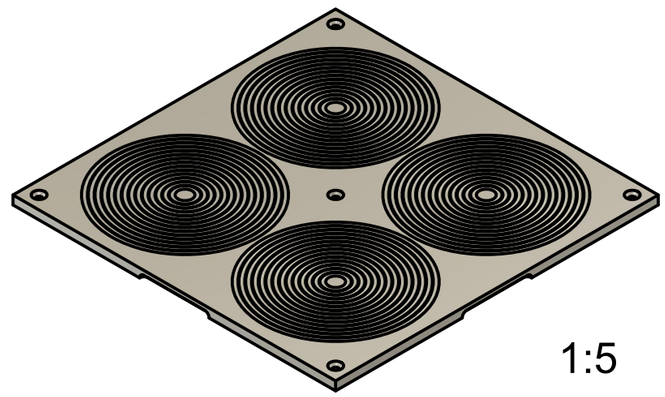

1:5

Item	Qty	Part Number	Description	Material
1	1	Suspension lines plate		Aluminum

Parts List

Dept. Prod. line	Technical reference	Created by ESP 31.07.2020	Approved by CGA 20.08.2020
		Document type DRW	Document status APPROVED
		Title Suspension lines plate Extended 4x14	DWG No.
			Rev. 2.0 / Date of issue 20.08.2020 / Sheet 1/1