4	3	2	1
SYMBOL/FASTENER DESCRIPTION	REV STATUS: REV / SHEET	REVISION HISTORY: ZONE / REV / DESCRIPTION / DATE / APPROVED	

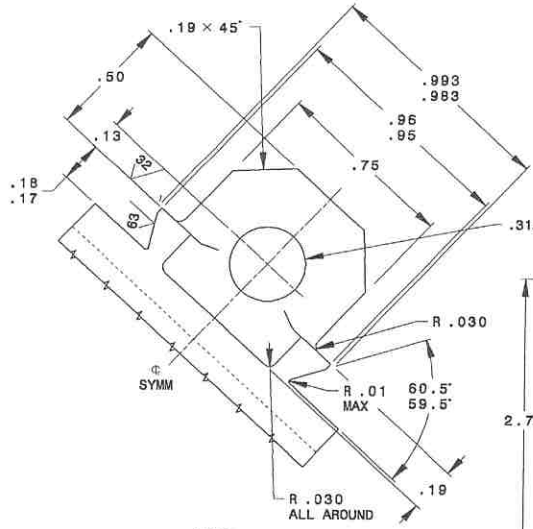

1C4
SCALE: 4/1

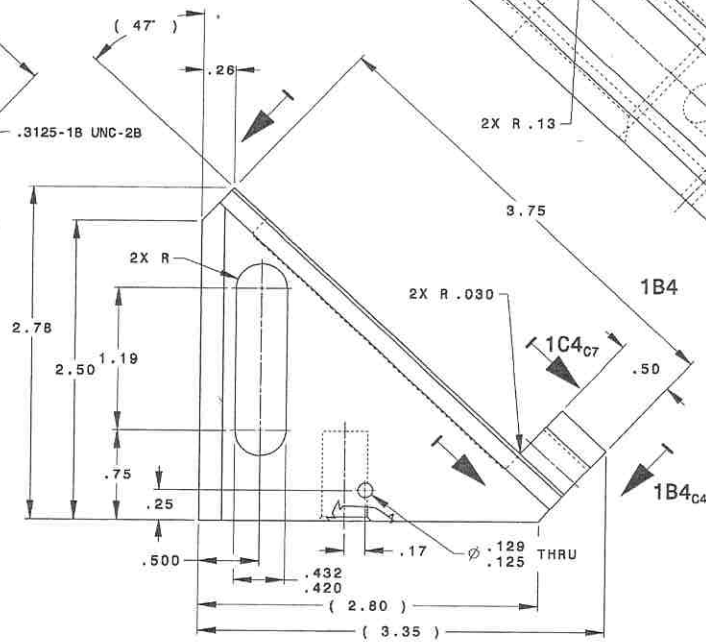

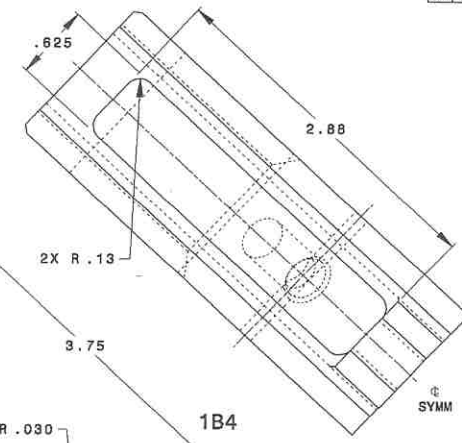

1B4

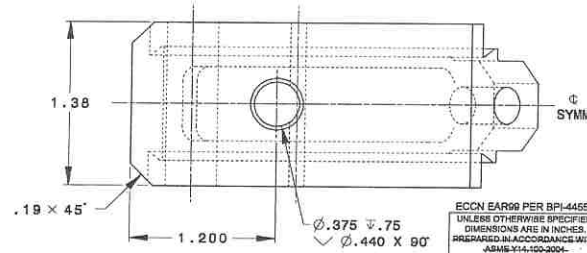

QT1

35 NCD 16

Repository	prodb_787_ENOVIA
Status	Approved
Status Date	2010-9-30
Drawing Number	K71001-119S01 ---

SEE DRAWING NOTES DOCUMENT FOR USAGE AND NOTES.
SEE BOM DOCUMENT FOR BILL OF MATERIAL.
~~SEE PL FOR LIST OF MATERIAL, USAGE AND NOTES.~~

ECCN EAR99 PER BPI-4455 APPENDIX C

UNLESS OTHERWISE SPECIFIED, DIMENSIONS ARE IN INCHES. PREPARED IN ACCORDANCE WITH ASME Y14.100-2004. DIMENSIONING AND TOLERANCING PER ASME Y14.5M-1994.
THIRD ANGLE PROJECTION-USA

TOLERANCES:
ANGLES = ± 2°
DECIMALS .X = ± .1
.XX = ± .03
.XXX = ± .010
~~.XXXX = ±.~~

DRAWN	V. ASNOVIN	DATE 08/25/10	MODEL 787
CHK	B. BRADHAM	DATE 09/28/10	GROUP GSE M-7356
STRESS	V. MUZYCHENKO	DATE 08/25/10	USED ON
ENGR	V. ASNOVIN	DATE 08/25/10	CHG NO DII 2600000270
ENGR CHK	R. DROEGEMUELLER	DATE 08/17/10	
GROUP	R. NEUDORFER	DATE 08/21/10	
INTEGRATION	C. COLEMAN	DATE 09/28/10	
PROJECT	N. GLAVIN	DATE 09/28/10	

DRAWING TITLE
ENGINE CHANGE KIT - GE

SIZE	CAGE CODE	DRAWING NUMBER	REV
D	81205	K71001-119	-
SCALE 2/1 AND NOTED		PIN	SHEET 1

DRAWING RECORDS

K71001-119 REV - SHEET 1 OF 1

BOEING is a trademark of Boeing Management Company.

SYMBOL/FASTENER DESCRIPTION	REV STATUS REV	REV STATUS SHEET

REVISION HISTORY

ZONE	REV	DESCRIPTION	DATE	APPROVED

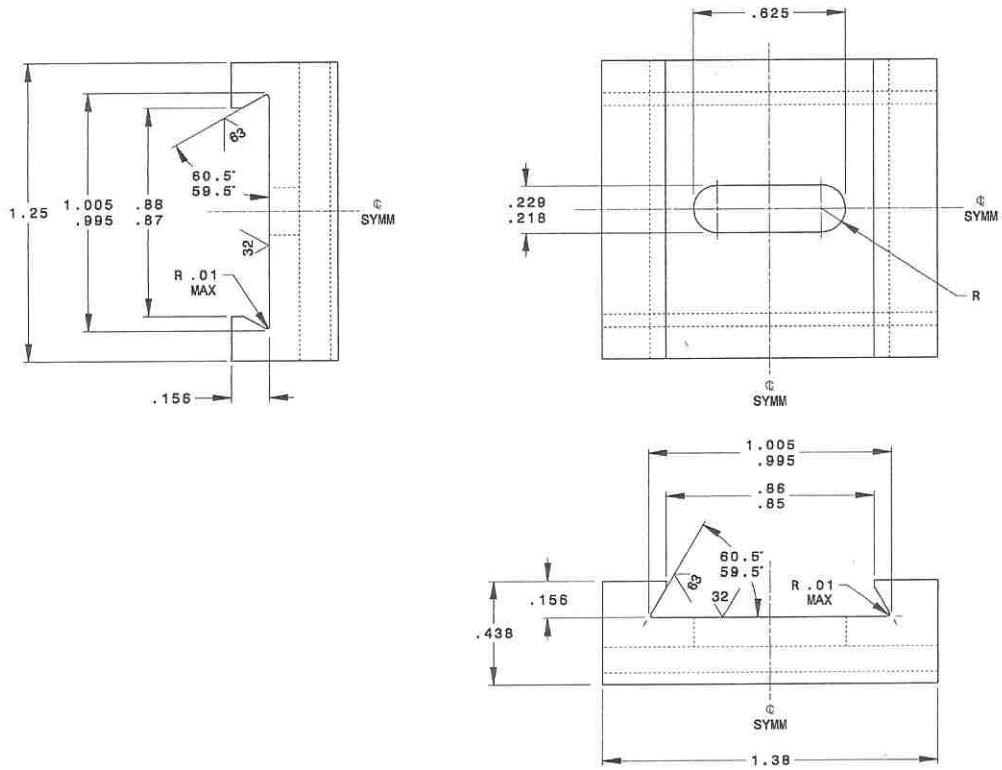

QT 1

35NCD16

Repository prodb_787_ENOVIA
Status Approved
Status Date 2010-9-30
Drawing Number K71001-120S01 —

SEE DRAWING NOTES DOCUMENT FOR USAGE AND NOTES.
~~SEE PL FOR LIST OF MATERIAL, USAGE AND NOTES~~

ECCN EAR99 PER BPI-4455 APPENDIX C

UNLESS OTHERWISE SPECIFIED, DIMENSIONS ARE IN INCHES. ~~PREPARED IN ACCORDANCE WITH ASME Y14.100-2004~~ DIMENSIONING AND TOLERANCING PER ASME Y14.5M-1994

THIRD ANGLE PROJECTION-USA

TOLERANCES:
ANGLES = ± 2°
DECIMALS .X = ± .1
.XX = ± .03
.XXX = ± .010
~~.XXXX = ±~~

		DATE	MODEL
DRAWN	V. ASNOVIN	09/25/10	787
CHK	B. BRADHAM	09/28/10	GROUP GSE M-7356
STRESS	V. MUZYCHENKO	09/25/10	USED ON
ENGR	V. ASNOVIN	09/25/10	CHG NO DII 2600000270
ENGR CHK	R. DROEGEMUELLER	09/17/10	
GROUP	R. NEUDORFER	09/21/10	
INTEGRATION	C. COLEMAN	09/28/10	
PROJECT	N. GLAVIN	09/25/10	

DRAWING TITLE
ENGINE CHANGE KIT - GE

SIZE	CAGE CODE	DRAWING NUMBER	REV
D	81205	K71001-120	-
SCALE 4/1		PIN	SHEET 1

DRAWING RECORDS

BOEING is a trademark of Boeing Management Company.

K71001-120