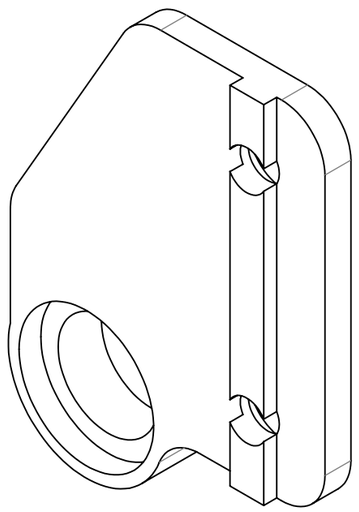

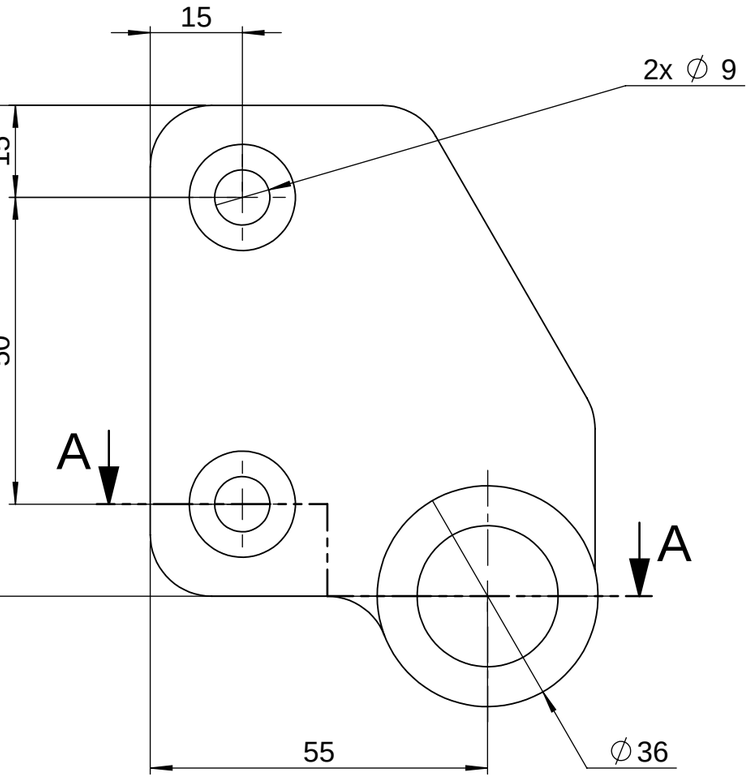

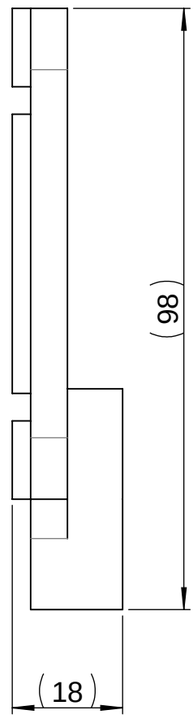

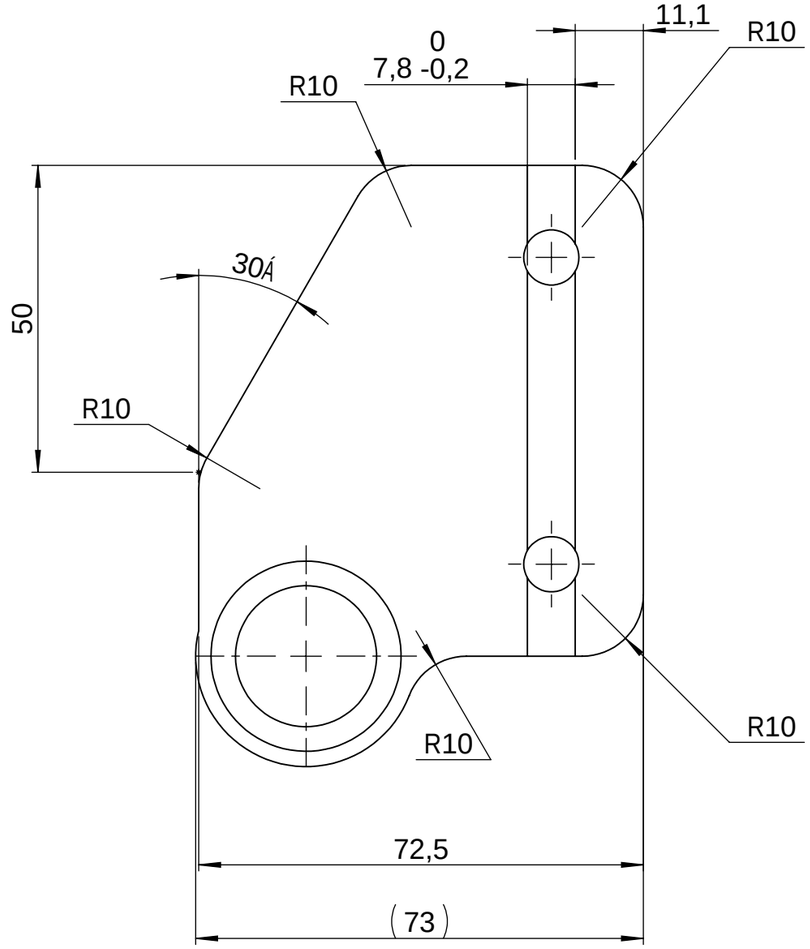

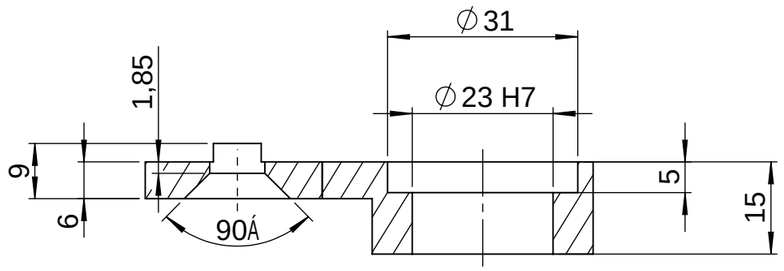

COUPE A-A

6.3
Unless Otherwise Indicated

Removal of burrs and sharp angle

Material : **3.1325 (EN-AW 2017A)**

Heat treatment :

Protection of surf :

EXEPT OTHER INDICATION					
General tolerances to be respected : ISO 2768 : m & k Welding : v Sheet Metal : v Mould : ISO 8062 Surface texture : ISO 1302 Welding Symbols : ISO 2553	WA+10	-	29-11-22	LMO	Creation du document
		Mod	Date	By	Modifications

Any printed copy of this document is not allowed, property exclusive to our company. Reproduction or use prohibited without our written consent

CAUTION :
All dimensions are in millimeters and projected view in ISO std

BEM
@tudes & r@alisations
m®caniques

PRT-22710-023
File Name

Mass (kg) : 0.10

PIVOT HAUT SYM.

PRT-22710-023
Drawing Number

Rev : **-**

Size : A3 | Scale : **1:1** | Units : mm | SolidWorks 2019

Sheet : **1/1**