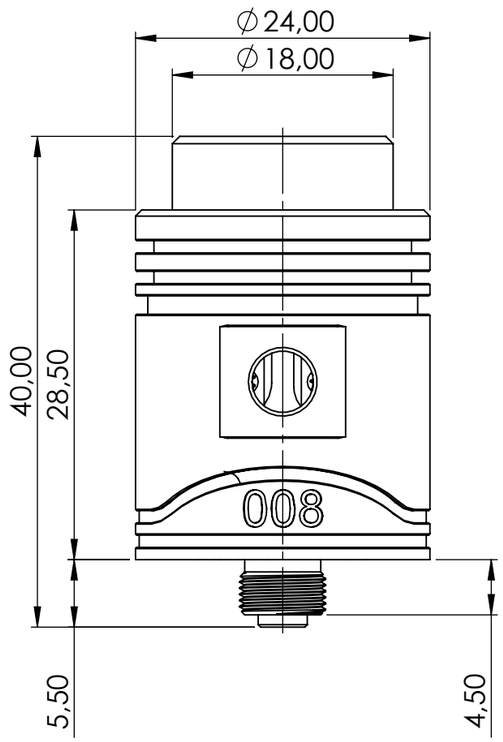

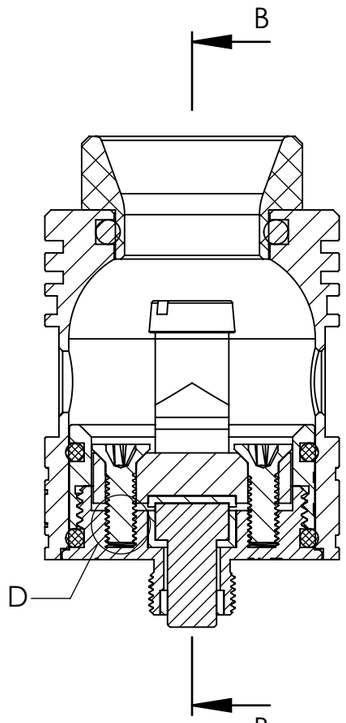

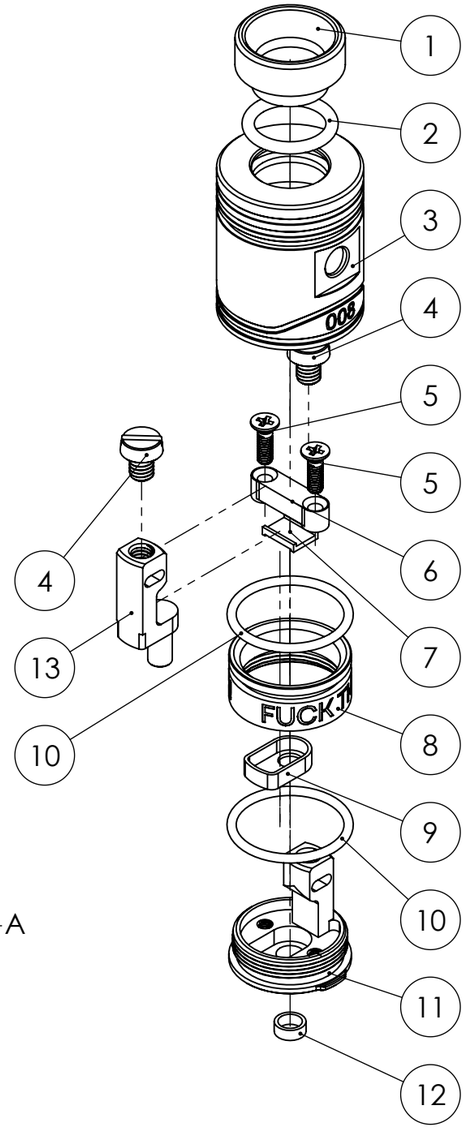

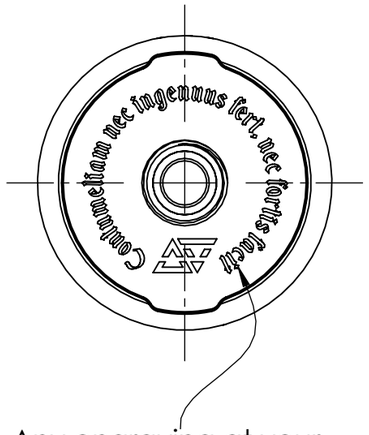

Any engraving at your choose included in price. Just tell me what to do.

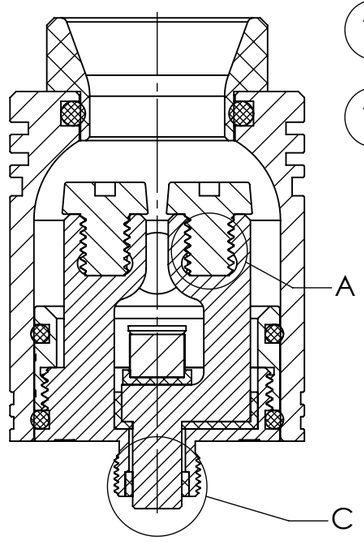

B-B (2 : 1)

Number	Detaling	Description	Quantity
1	Driptip^BURN v1_0	POM (optional)	1
2	O-ring driptip^BURN v1_0	Rubber	1
3	Cap^BURN v1_0	AISI SS316 Stainless steel (optional)	1
4	DIN EN ISO 1207 - M4 x 5 - 5N	-	2
5	DIN EN ISO 7046-1 - M2.5 x 8 - Z - 8N	-	2
6	Holder^BURN v1_0	AISI SS316 Stainless steel	1
7	Holder's insulator^BURN v1_0	PEEK	1
8	Ring^BURN v1_0	AISI SS316 Stainless steel (optional)	1
9	Insulator post^BURN v1_0	PEEK	1
10	O-ring deck^BURN v1_0	Rubber	2
11	Deck^BURN v1_0	Silver AgCu80 or better	1
12	Insulator connector^BURN v1_0	PEEK	1
13	Post^BURN v1_0	Silver AgCu80 or better	1

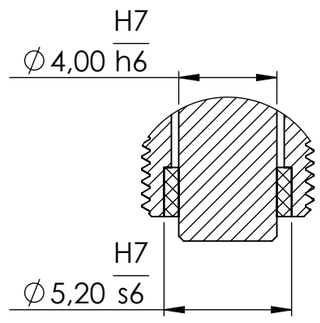

Local view C
4 : 1

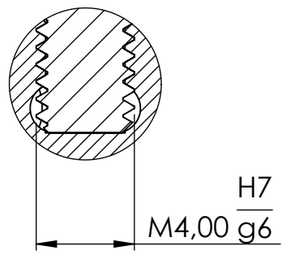

Local view A
4 : 1

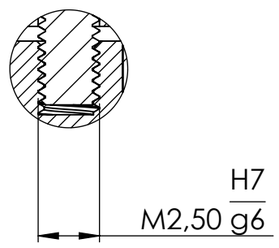

Local view D
4 : 1

Assembling help:
1. Install the Insulator 9 to the Deck 11;
2. Install the Post 13 to the Deck 11 with insulator 9;
3. Install the Insulator 7 above the Post 13;
4. Install the Holder 6 above the insulator 7 holes in Deck 11 and Holder 6 needs match;
5. Tighten the Screws 5;
6. Install the Ring 8;
7. Press the Insulator 12 to their place;
8. Install Screws 4 and O-rings in their places;
9. Install the Cap 3 and Driptip 1 in their places.

ПО УМОЛЧАНИЮ: РАЗМЕРЫ В МИЛЛИМЕТРАХ ШЕРОХОВАТОСТЬ: ДОПУСКИ: ЛИНЕЙНЫЕ: УГЛОВЫЕ:	ОБРАБОТКА:	СГЛАДИТЬ ЗАУСЕНЦЫ И ОСТРЫЕ КРОМКИ	НЕ МАСШТАБИРОВАТЬ ЧЕРТЕЖ	РЕДАКЦИЯ 1.0		
	ИМЯ	ПОДПИСЬ	ДАТА	НАЗВАНИЕ: BURN RDA dual coil v1.0		
Разраб	Artius Vens					
Пров.						
Утв.						
Маш.						
Т.контр				Material: -	ЧЕРТЕЖ №: BURN v1_0	A3
				МАССА:	МАСШТАБ:1:2	ЛИСТ 1 ИЗ 1