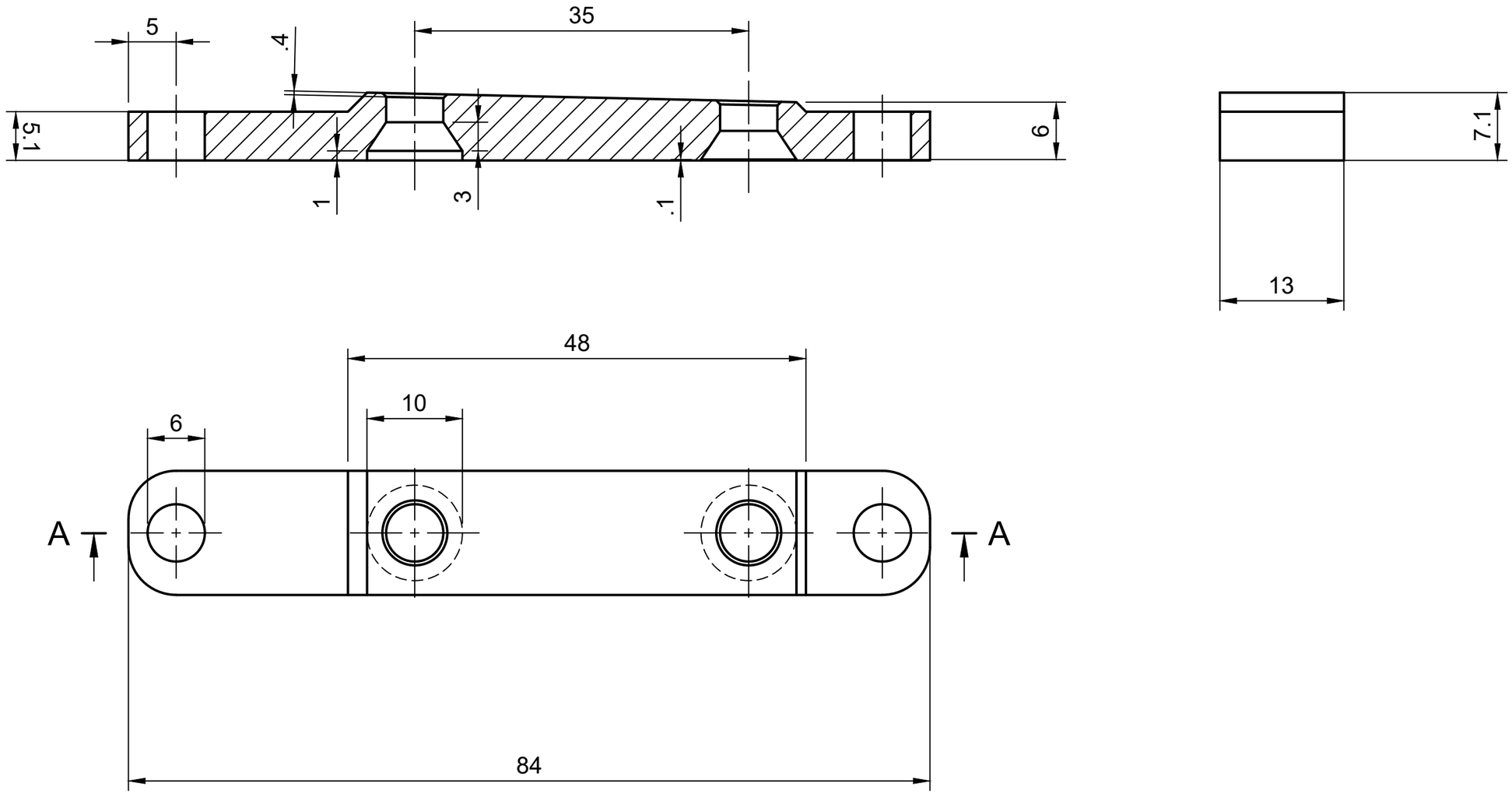

Dept.	Technical reference	Created by charles goruchon 29/05/2021	Approved by
		Document type	Document status
		Title Adaptateur Disk brake 40 mm	DWG No.
			Rev. / Date of issue / Sheet 1/1