KELENN Technology - 6 rue Ampère - 91430 IGNY - FRANCE - Tel : +33 (0) 975 23 3354 - www.kelenntech.com | Property of KELENN Technology. Copy and communication forbidden without authorization

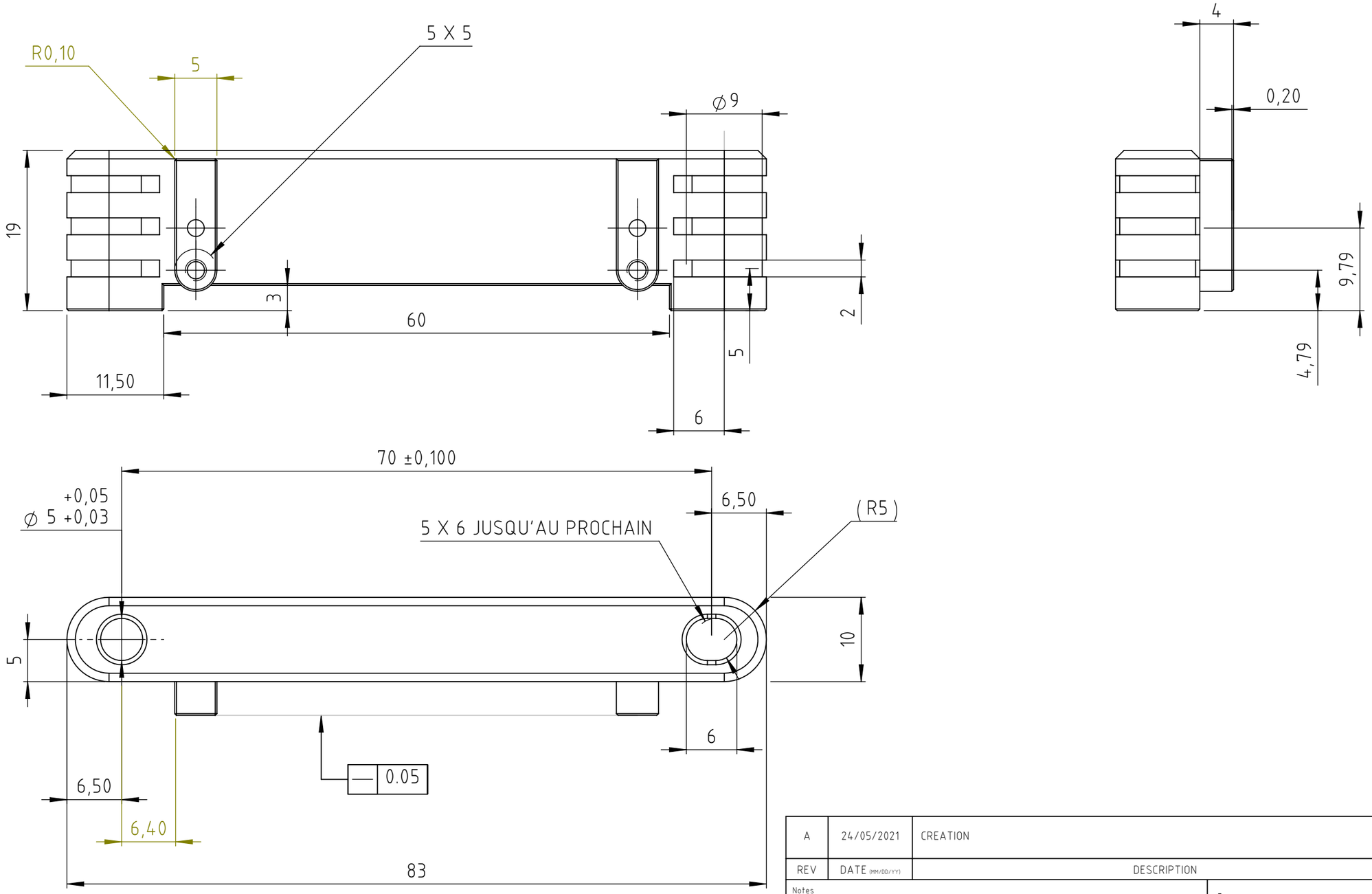

REV	DATE (MM/DD/YY)	DESCRIPTION	AUTHOR	CONTROLER
A	24/05/2021	CREATION	Alexis GOT	-

Notes
-
-

-
-
-

MATERIAL	TREATMENT	FINISHING	GENERAL SURFACE ROUGHNESS	THICKNESS
3.3547 / 5083 / AG4,5MC	DEGREASING	NO SCRATCH	-	-

VOLUME [mm3]	WEIGHT [g]	SURFACE [mm2]	GENERAL TOLERANCES
12926.55	34.38	5819.88	-

PART NUMBER	DESIGNATION
KT210395A	S800 MOUNTING PART

FORMAT A3	SCALE 2:1	FOLIO 1/2

FOLIO 1

KELENN Technology - 6 rue Ampère - 91430 IGNY - FRANCE - Tel : +33 (0) 975 23 3354 - www.kelenntech.com | Property of KELENN Technology. Copy and communication forbidden without authorization

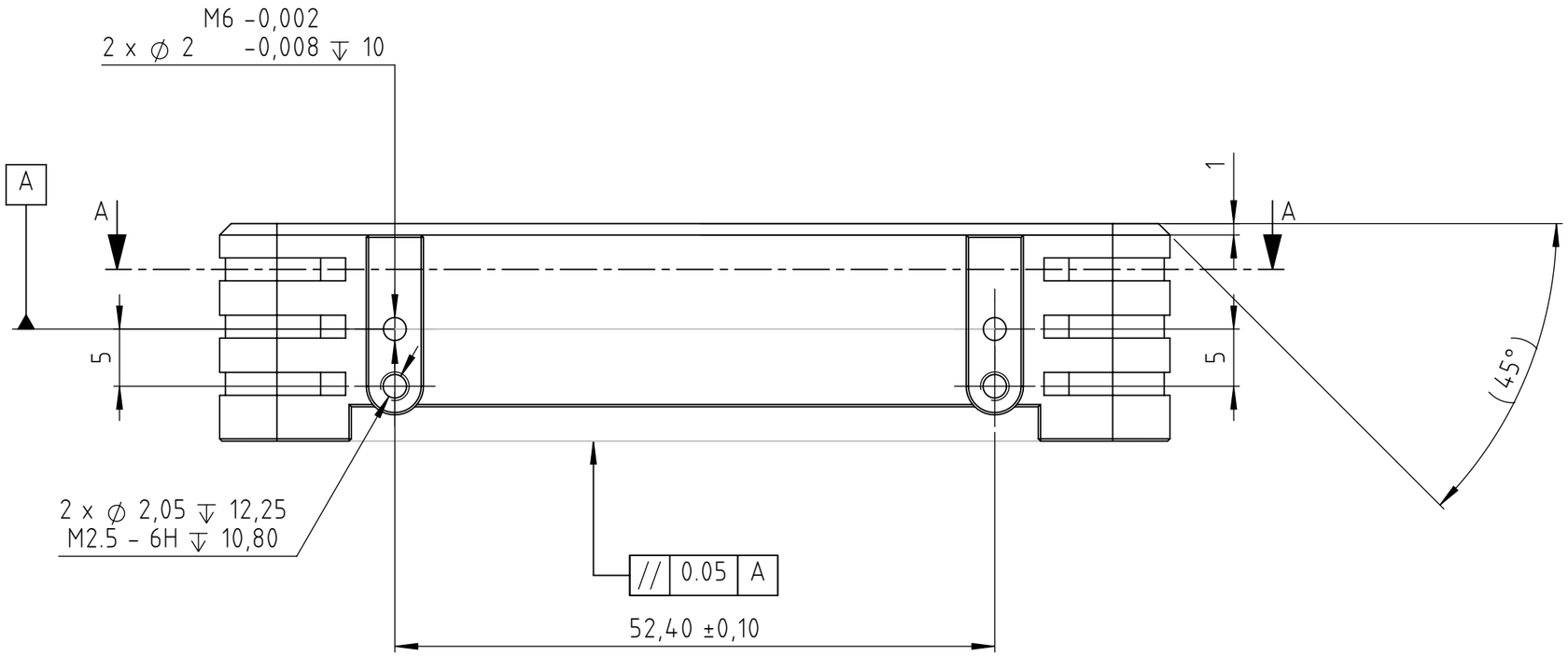

COUPE A-A

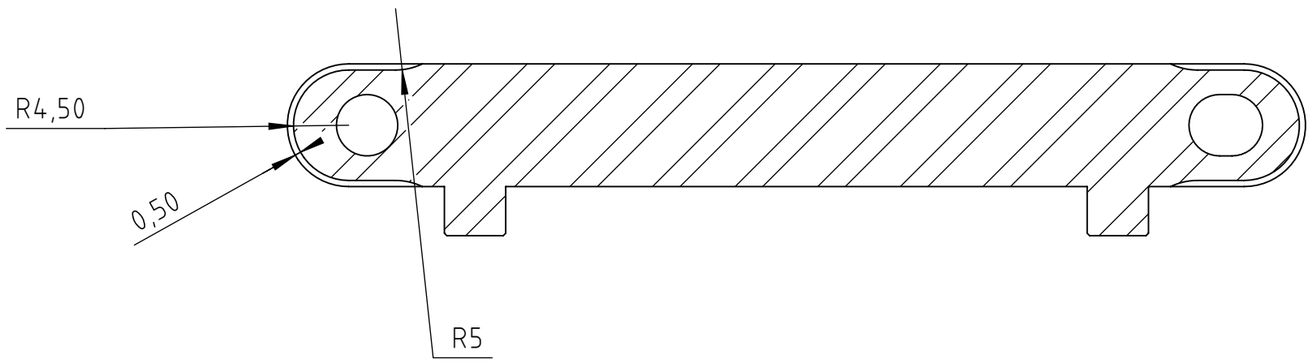

FOLIO 2

PART NUMBER	DESIGNATION
KT210395A	S800 MOUNTING PART

FORMAT A3	SCALE 2:1	FOLIO 2/2