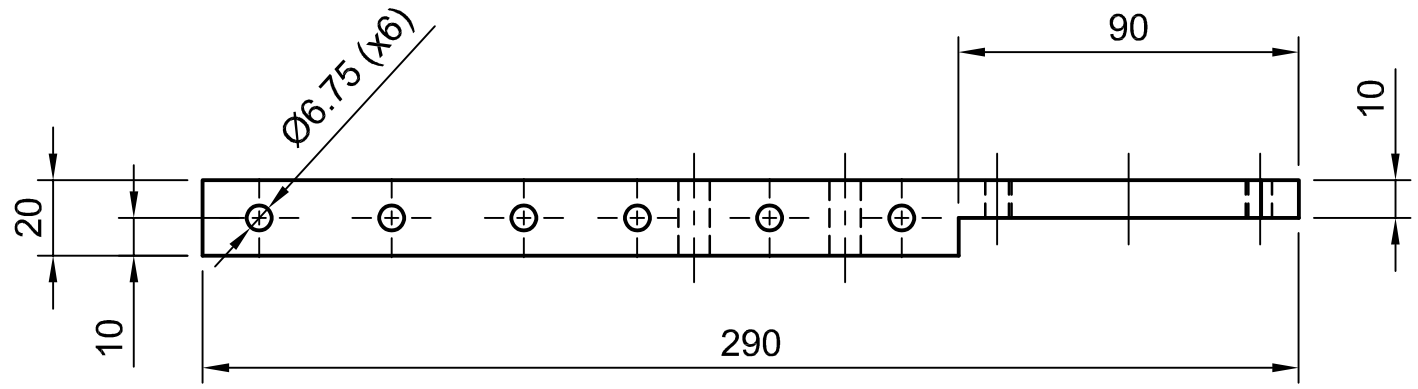

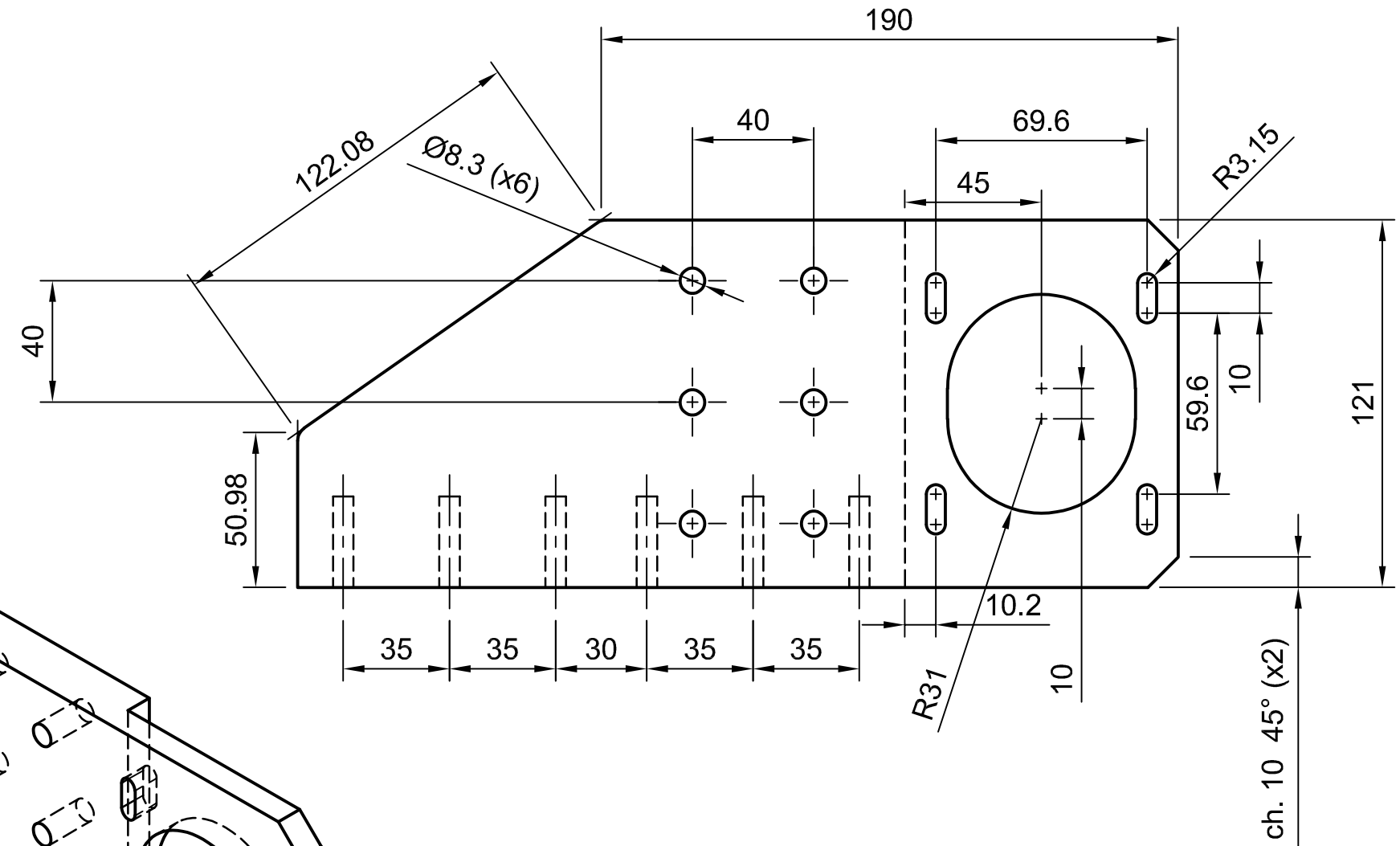

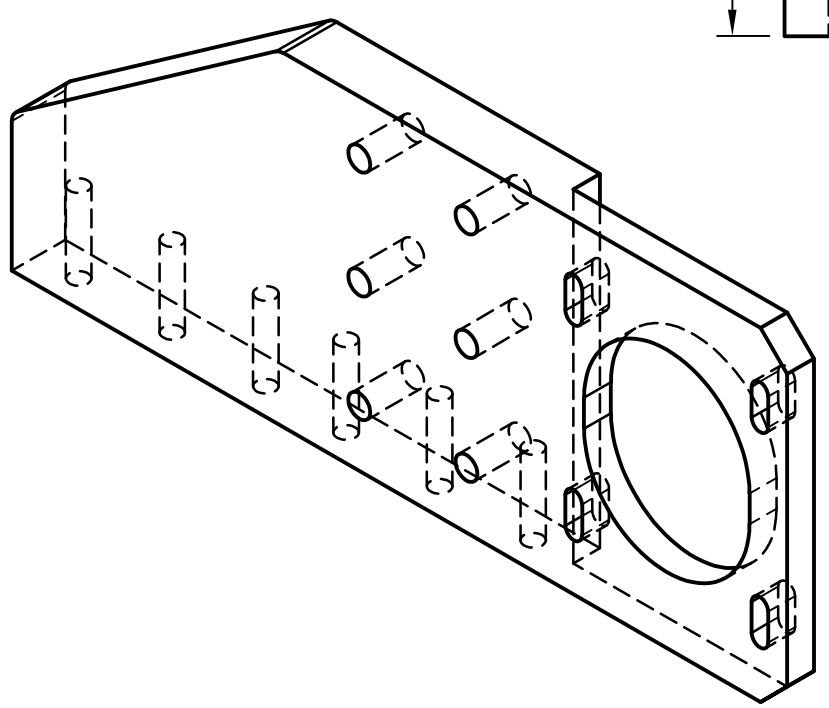

Dept.	Technical reference	Created by	Approved by
		Yann Aubert 01/02/2021	
		Document type	Document status
		Title plaque liaison traverse patins moteur	DWG No.
			Rev. / Date of issue / Sheet 1/1