References en Y ↑

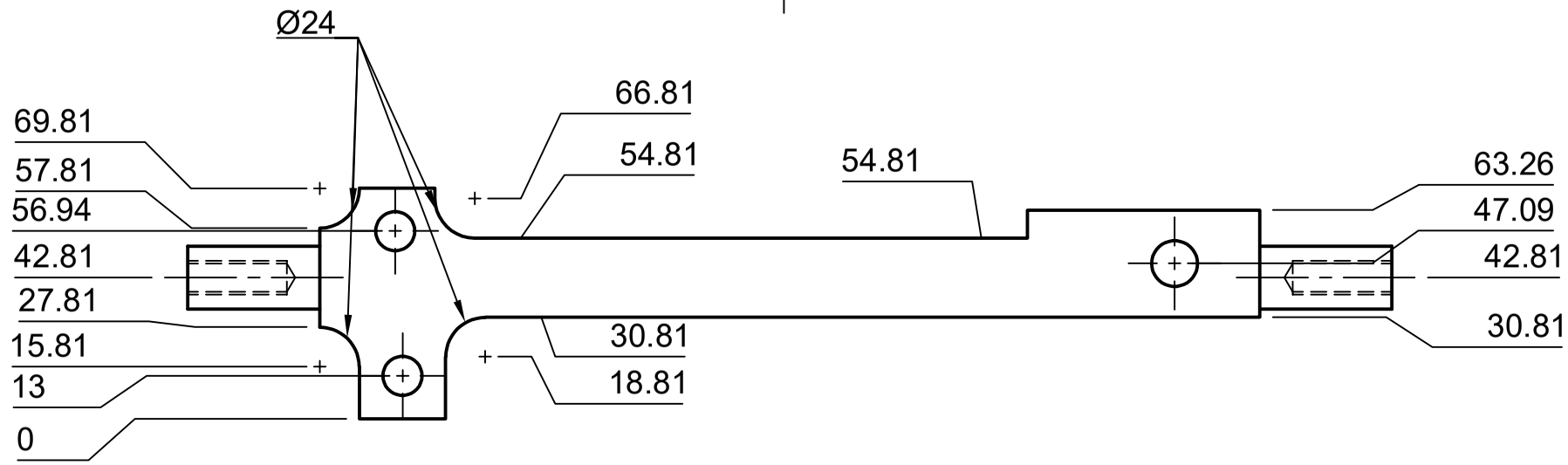

References en X →

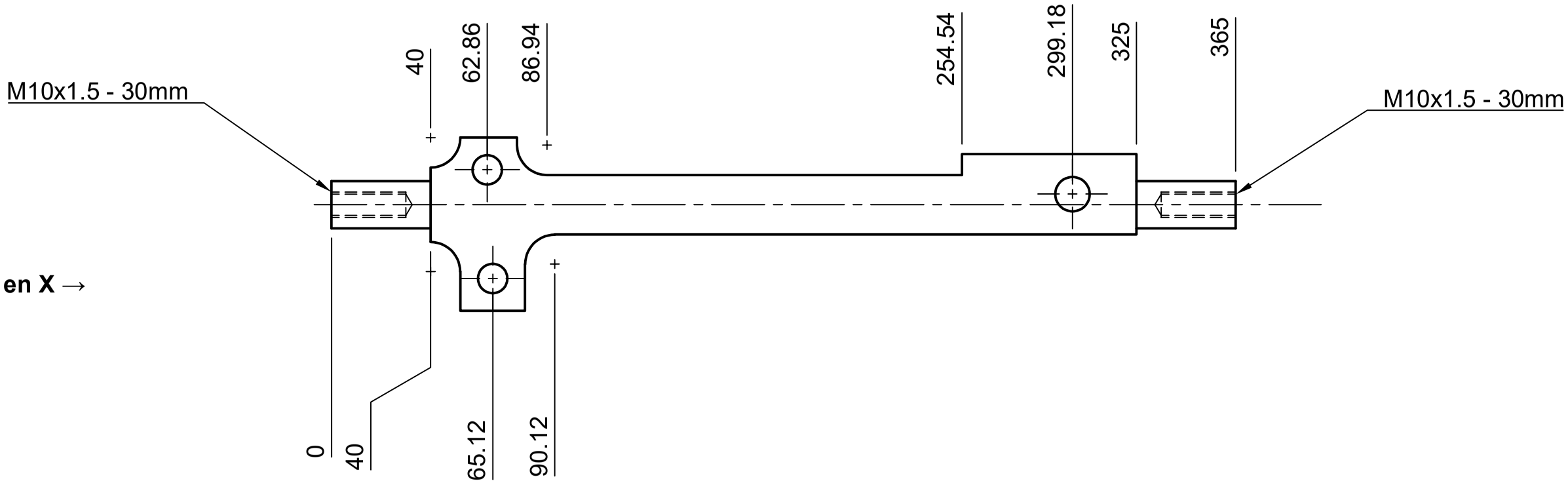

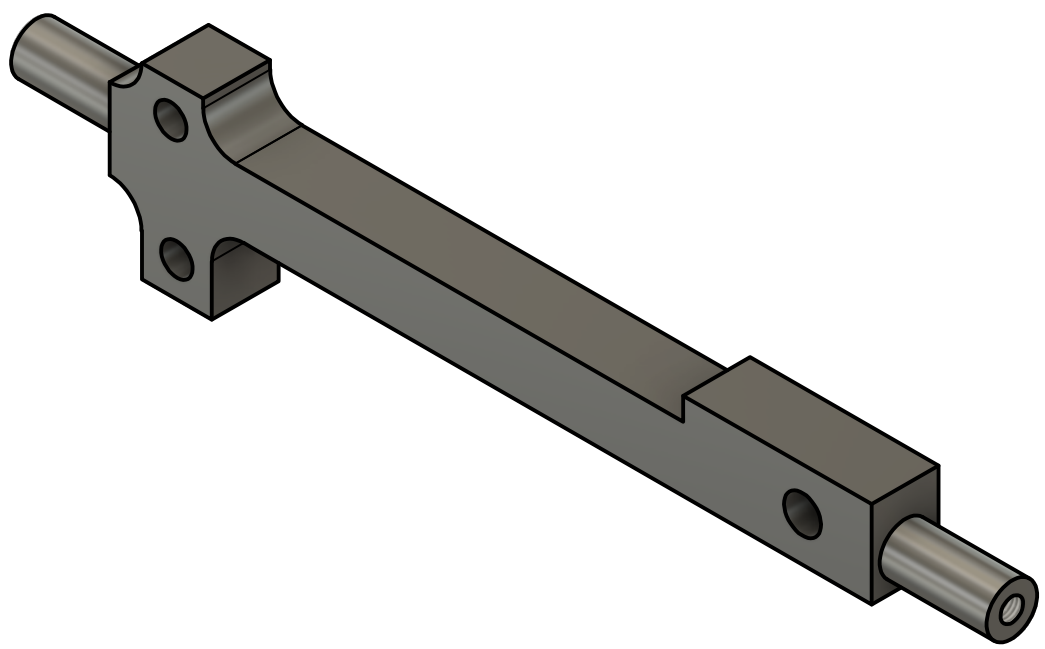

Dept.	Technical reference	Created by	Approved by
		Benoit Lescot 2/10/2021	
		Document type	Document status
		Title: Offset Lower control shaft	DWG No.
			Rev. / Date of issue / Sheet 1/1