The information contained in this drawing is the sole property of ROBOPLANET. Any reproduction or diffusion to a third party is strictly prohibited without the consent of ROBOPLANET.

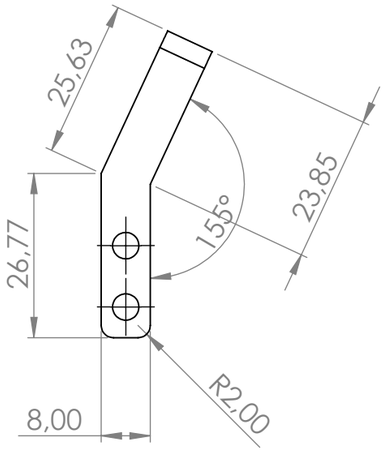

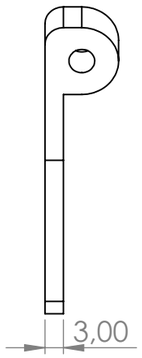

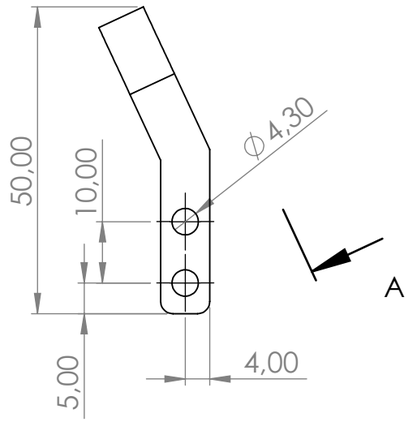

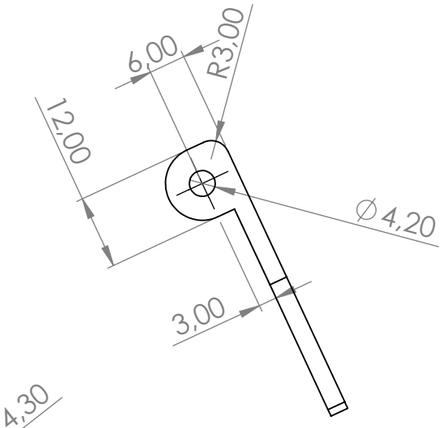

COUPE A-A

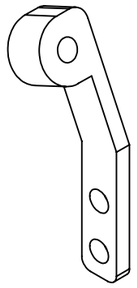

This part is fully depicted by its 3D model PAN-USI-008-A-CHAPE SYM.STEP

Version	Edited by	Modification detail	Date
E			
D			
C			
B			
A	Q.M	Agreement for manufacturing	06/08/2021

Version : **A**	*Qty:*					*Format:* A3	*Designed by :* **Q.M**	*Date :* 06/08/2021
Page : 1/1	Longueurs	≤6	>6 à 30	>30 à 120	>120	*Designation*	
Scale : 1:1		+/- 0,1	+/-0,2	+/-0,3	+/-0,5	**PAN-USI-008-A-CHAPE SYM**	
	Angle	≤10	>10 à 50	>50 à 120	>120	*File number*	
		± 1°	± 30'	± 20'	± 10'	**PAN-USI-008-A-CHAPE SYM**	
Material : **3.1325 (EN-AW 2017A)**		*Treatment :* **BRUT**				ROBOPLANET	
Last backup : **06/08/2021**		*Finish :*					

ROBOPLANET
6 rue Dieng Kuntz
44307 Nantes cedex
09 8113 40 87
www.roboplanet.fr