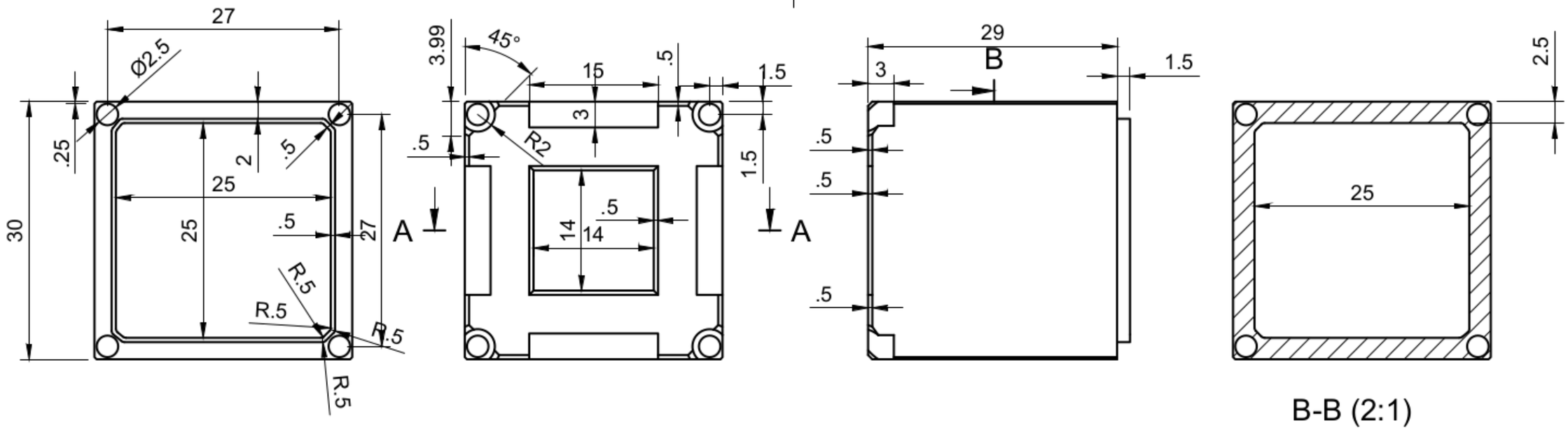

A-A (2:1)

B-B (2:1)

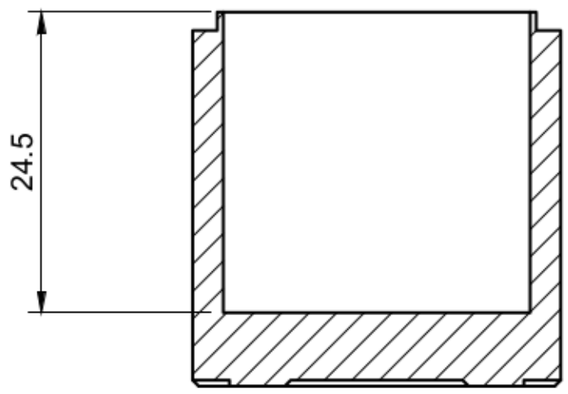

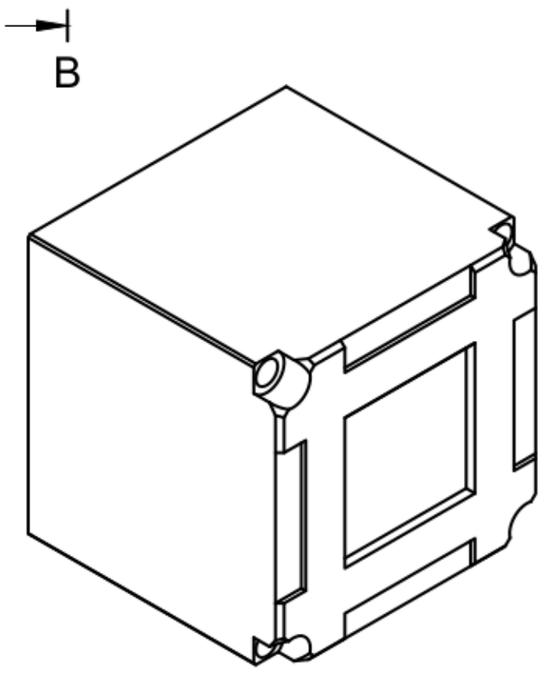

Dept.	Technical reference		Approved by
			Document status
			DWG No.
			Rev. / Date of issue / Sheet 1/1