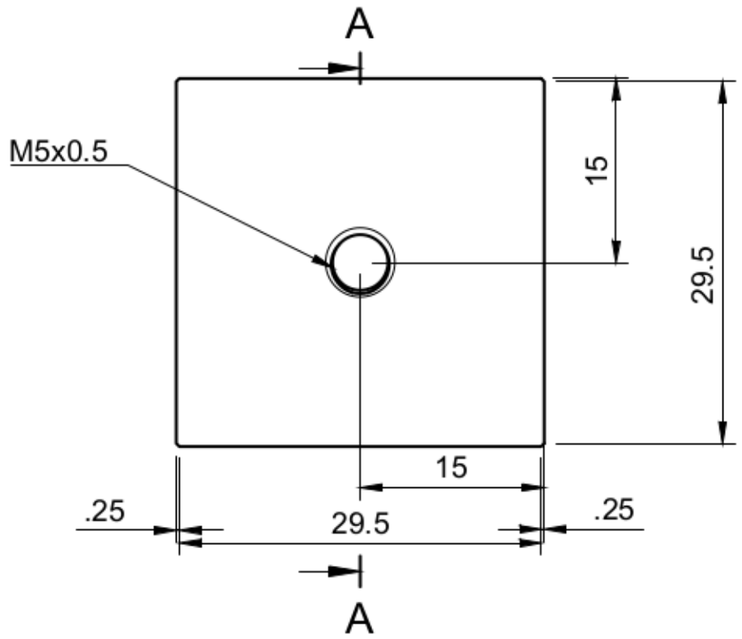

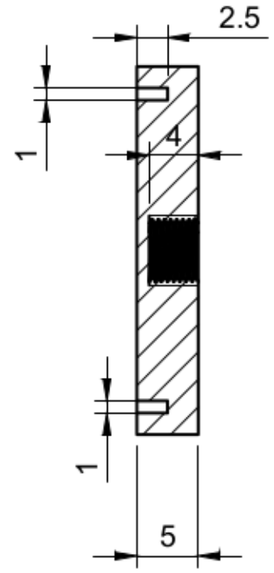

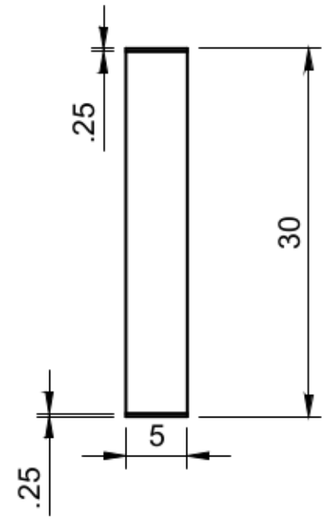

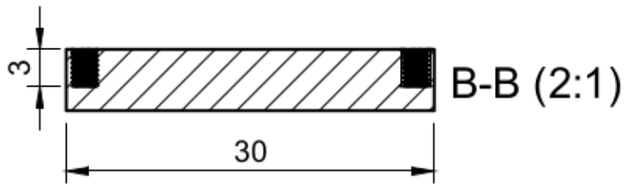

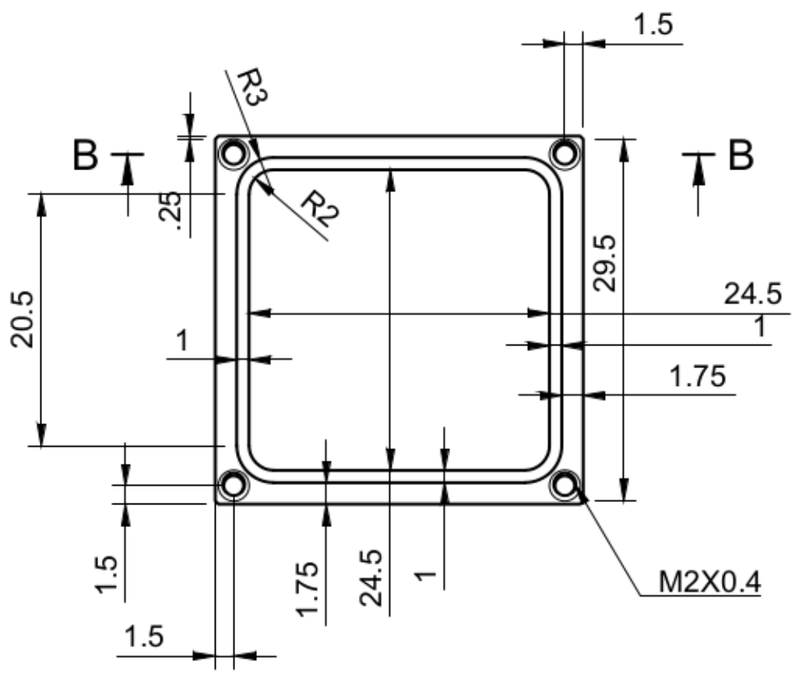

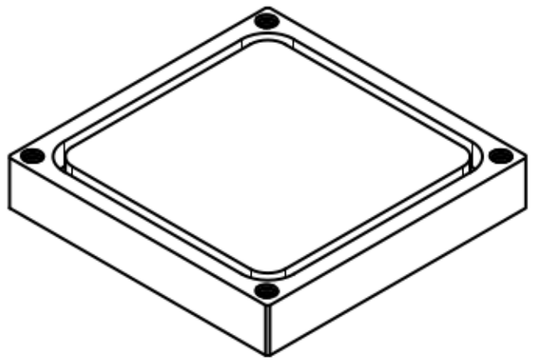

Dept.	Technical reference		Approved by	
			Document status	
			DWG No.	
			Rev. / Date of issue	Sheet 1/1