Isometric view
Scale: 1:1

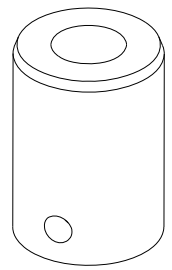

Section view A-A
Scale: 2:1

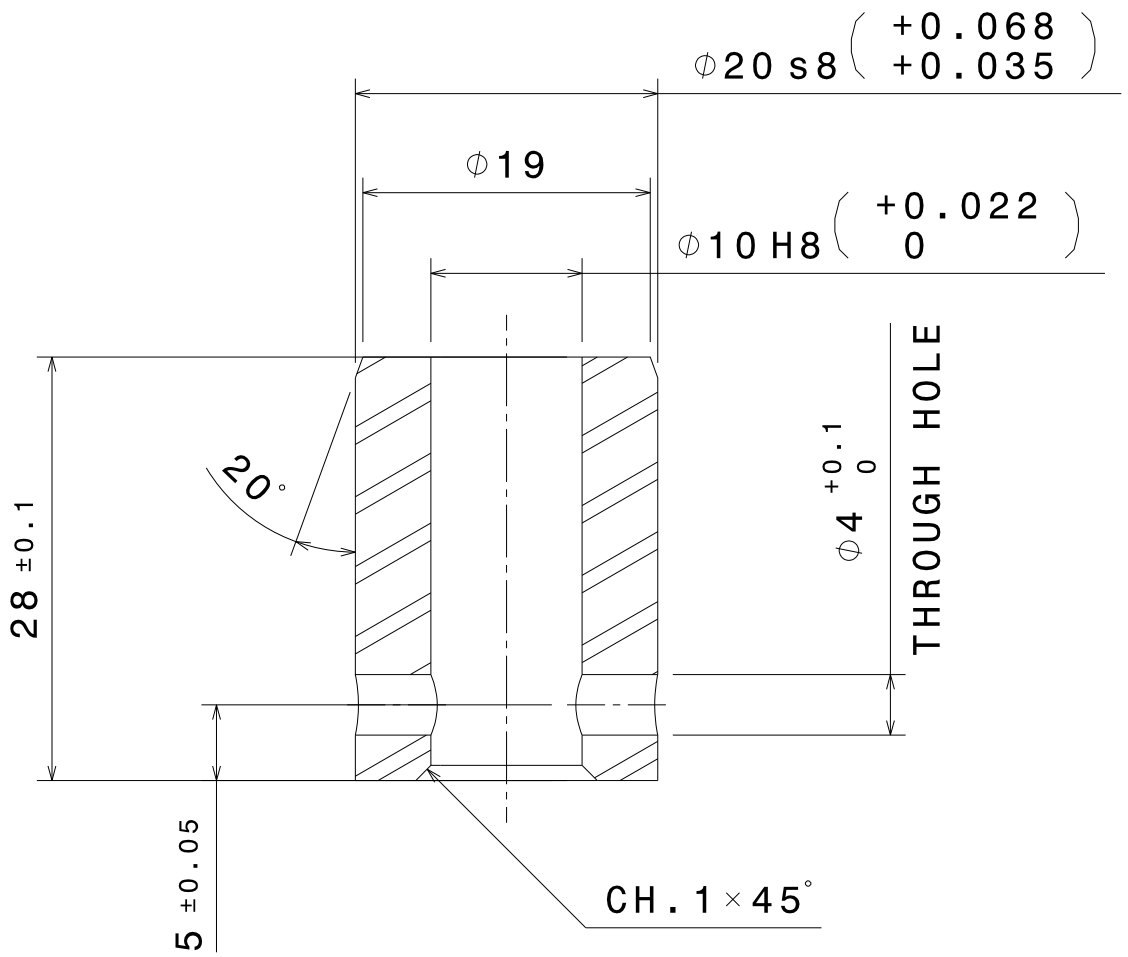

Front view
Scale: 2:1

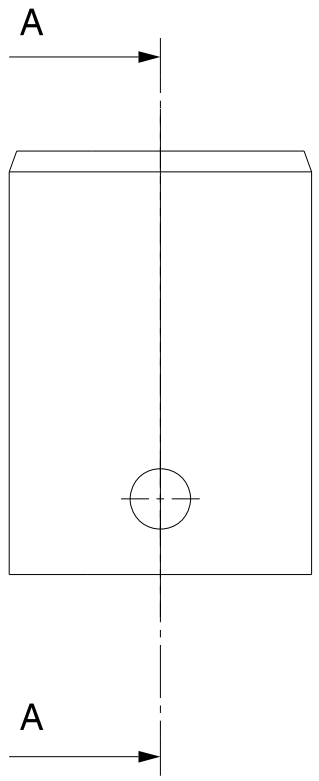

NOTA	
1	BREAK SHARP EDGES R OR CH. 0.1 TO 0.4
2	COLORLESS SULFURIC ANODIC OXYDATION ALL THE PART

ISSUE			
A	NEW DRAWING	29/12/19	SEQUERA D.
IND.	MODIFICATIONS	DATE	APPROVED BY

REVISION HISTORY

DOC STATUS: IN WORK

GENERAL TOLERANCES: ISO 2768-mK UNLESS OTHERWISE SPECIFIED

WORKPIECE EDGES: ISO 13715 UNLESS OTHERWISE SPECIFIED (-0.3 / -0.1) (+0.3 / +0.1)

DESIGNED BY: SEQUERA D.
DATE: 29/12/2019

CHECKED BY: SEQUERA D.
DATE: ../../....

APPROVED BY: SEQUERA D.
DATE: ../../....

NOYAU PIGNON CONIQUE

This drawing is the property of IXEBERG SAS, it can't be reproduced or communicated without his written agreement.

IXEBERG

ROUGHNESS: 3.2

WEIGHT (kg): 0.017

SCALE: 1:1

SHEET: 1/1

DRAWING NUMBER: EOLX1.2-D-130-006

ISSUE: A

SIZE: A3