Front view
Scale: 1:1

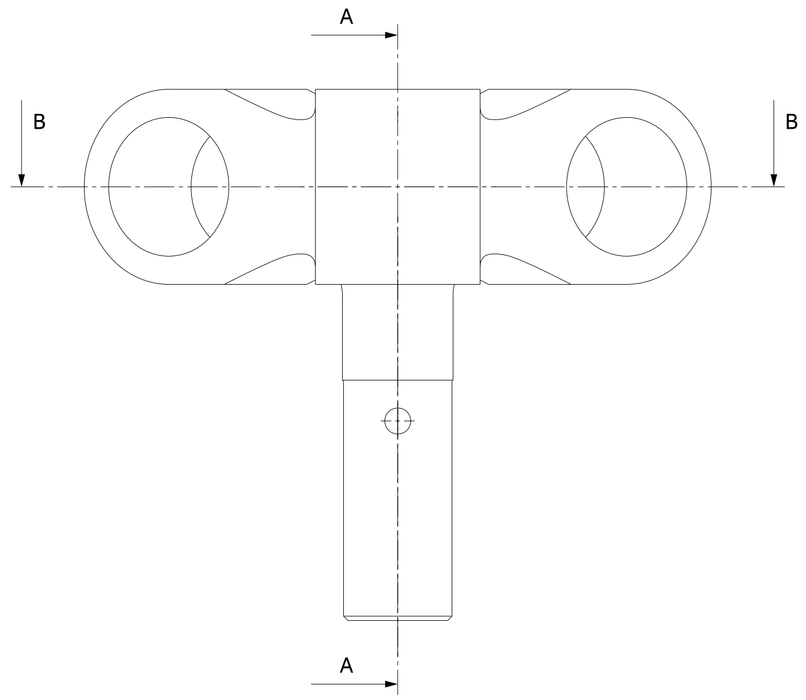

Section view A-A
Scale: 1:1

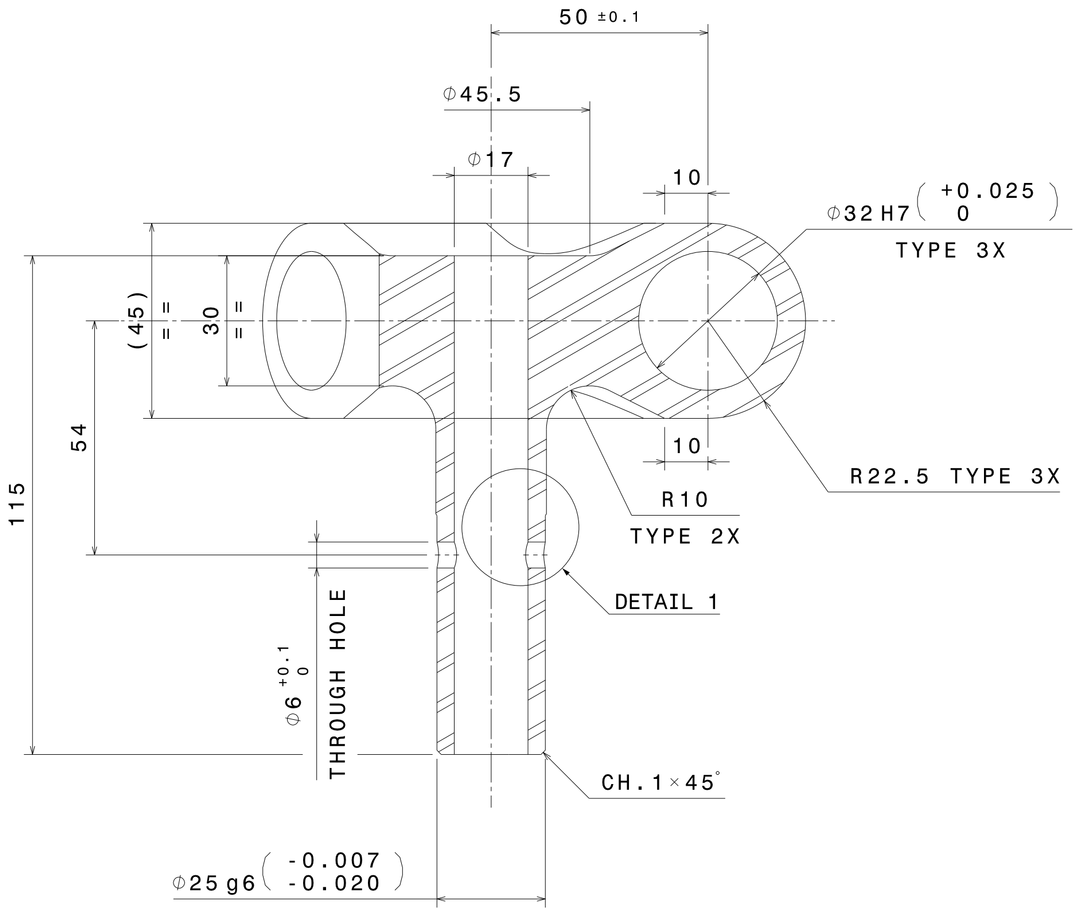

Isometric view
Scale: 1:1

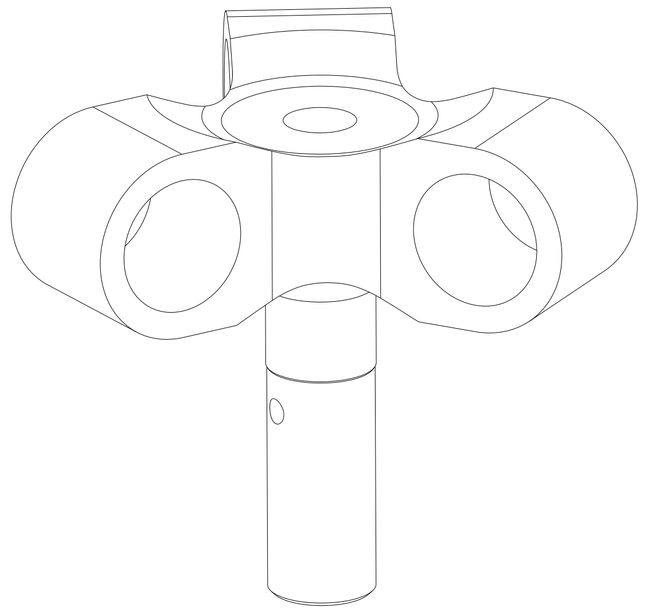

Detail 1
Scale: 4:1

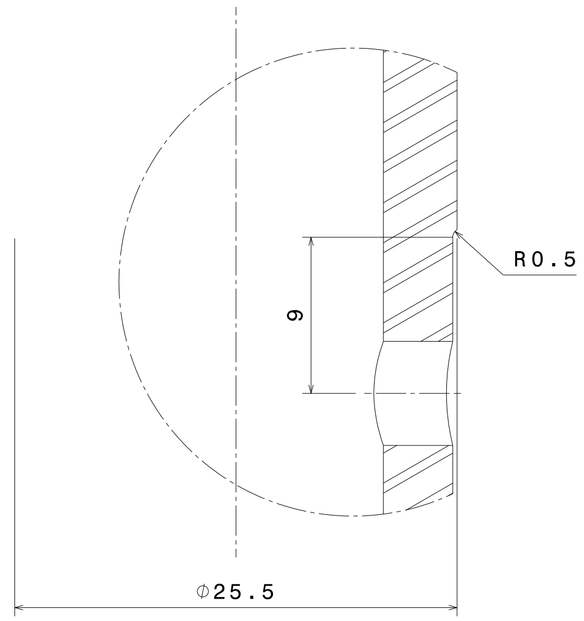

Section view B-B
Scale: 1:1

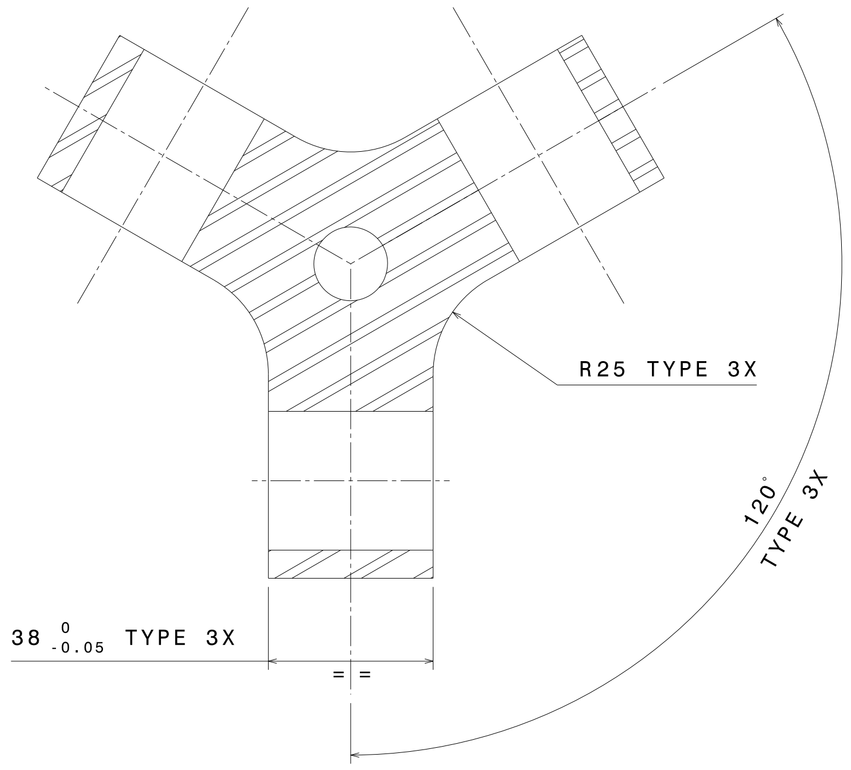

NOTA	
1	BREAK SHARP EDGES R OR CH. 0.1 TO 0.4
2	COLORLESS SULFURIC ANODIC OXYDATION ALL THE PART

ISSUE			
A	NEW DRAWING	19/10/19	SEQUERA D.
IND.	MODIFICATIONS	DATE	APPROVED BY

REVISION HISTORY

DOC STATUS: IN WORK

GENERAL TOLERANCES: ISO 2768-mK UNLESS OTHERWISE SPECIFIED

WORKPIECE EDGES: ISO 13715 UNLESS OTHERWISE SPECIFIED -0.3 -0.1 +0.3 +0.1

DESIGNED BY: SEQUERA D.
DATE: 19/10/2019

ROUGHNESS: 3.2

CHECKED BY: SEQUERA D.
DATE: ../../....

WEIGHT (kg): 0.559

This drawing is the property of IXEBERG SAS, it can't be reproduced or communicated without his written agreement.

APPROVED BY: SEQUERA D.
DATE: ../../....

IXEBERG

SCALE: 1:1

SHEET: 1/1

DRAWING NUMBER: EOLX1.3-D-110-001

ISSUE: A

SIZE: A1