Front view
Scale: 2:1

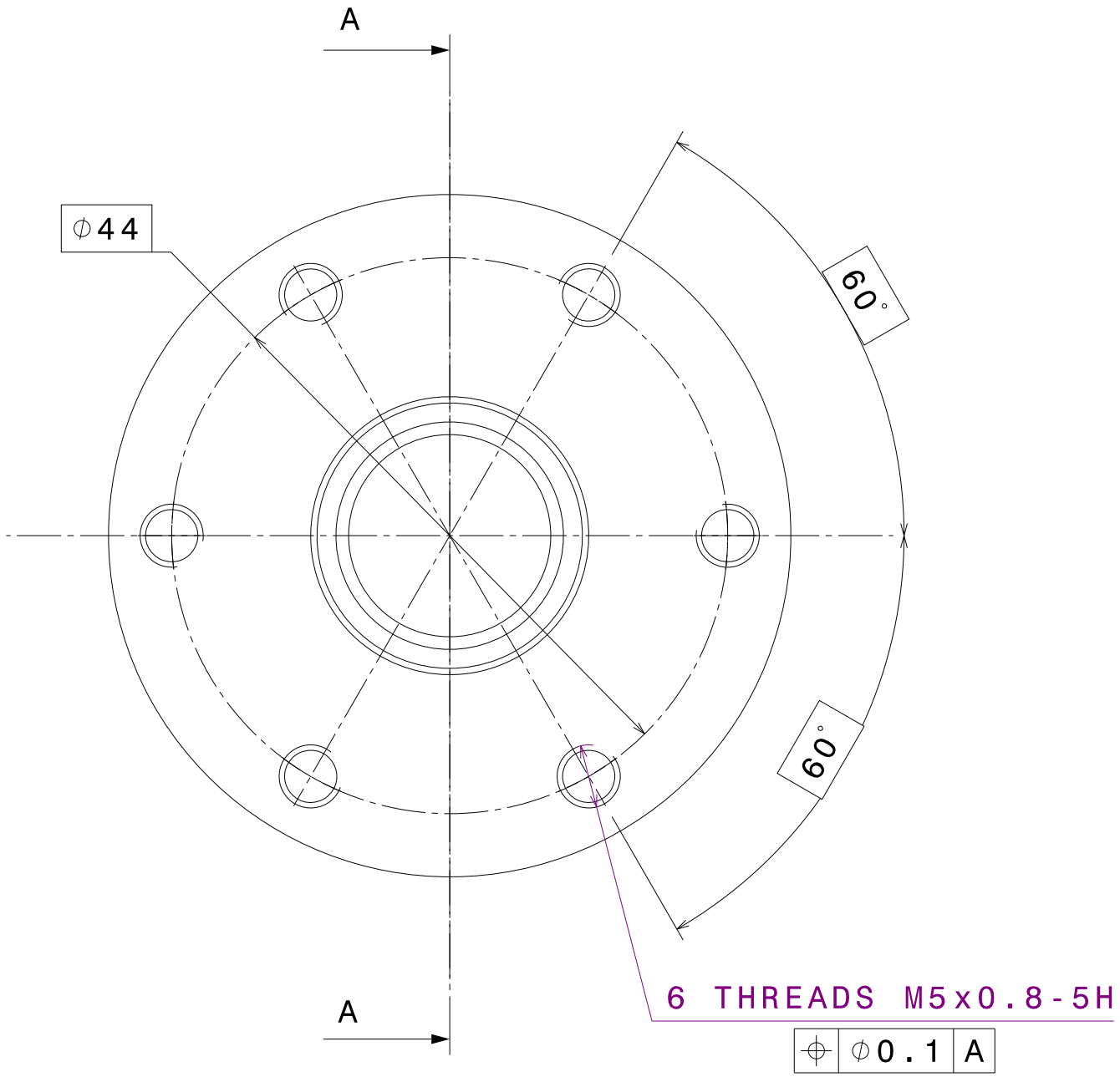

Section view A-A
Scale: 2:1

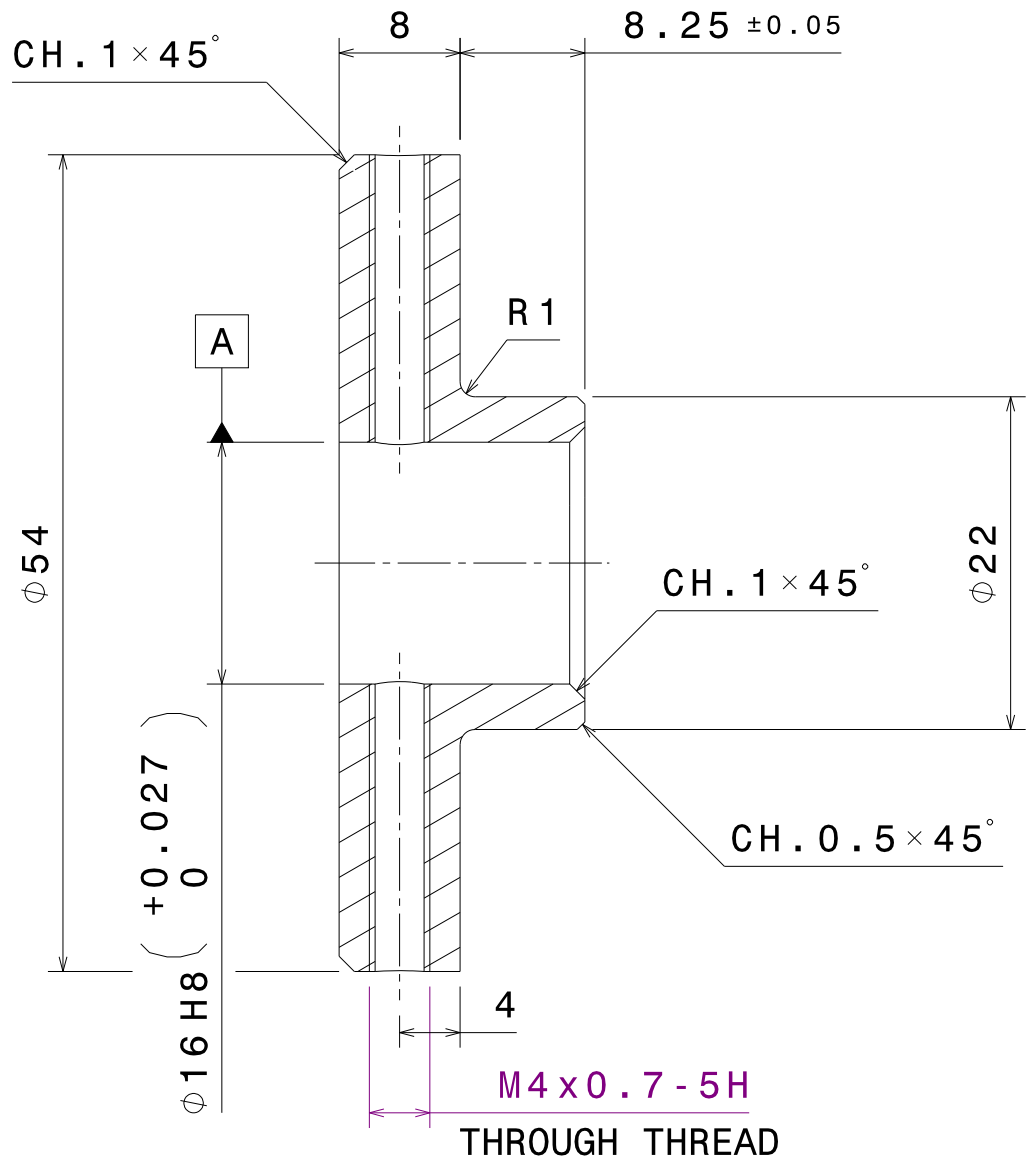

Isometric view
Scale: 1:1

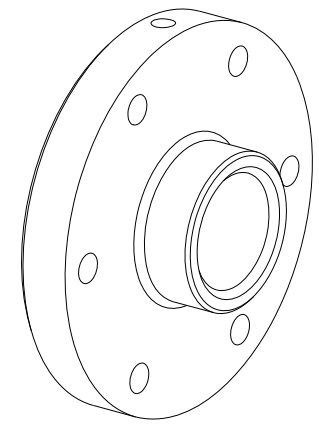

NOTA	
1	BREAK SHARP EDGES R OR CH. 0.1 TO 0.4
2	PHOSPHATING ALL THE PART

ISSUE			
A	NEW DRAWING	29/12/19	SEQUERA D.
IND.	MODIFICATIONS	DATE	APPROVED BY

REVISION HISTORY

DOC STATUS: IN WORK

GENERAL TOLERANCES: ISO 2768-mK UNLESS OTHERWISE SPECIFIED

WORKPIECE EDGES: ISO 13715 UNLESS OTHERWISE SPECIFIED -0.3 -0.1 +0.3 +0.1

DESIGNED BY: SEQUERA D.
DATE: 29/12/2019

CHECKED BY: SEQUERA D.
DATE: ../../....

APPROVED BY: SEQUERA D.
DATE: ../../....

ROUGHNESS 3.2

WEIGHT (kg) 0.134

This drawing is the property of IXEBERG SAS, it can't be reproduced or communicated without his written agreement.

IXEBERG

SCALE 2:1

SHEET	DRAWING NUMBER	ISSUE	SIZE
1/1	EOLX1.0-D-000-008	A	A3