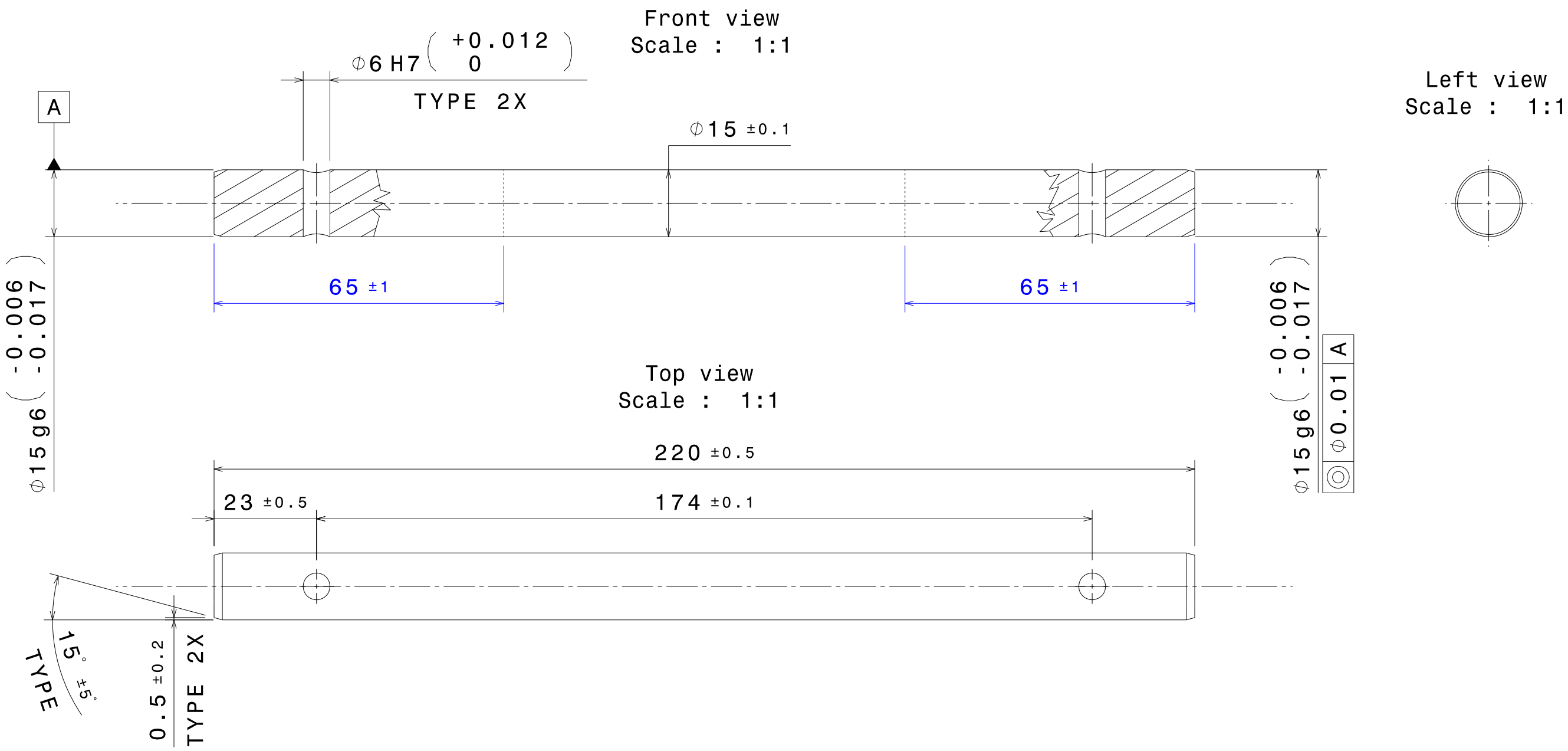

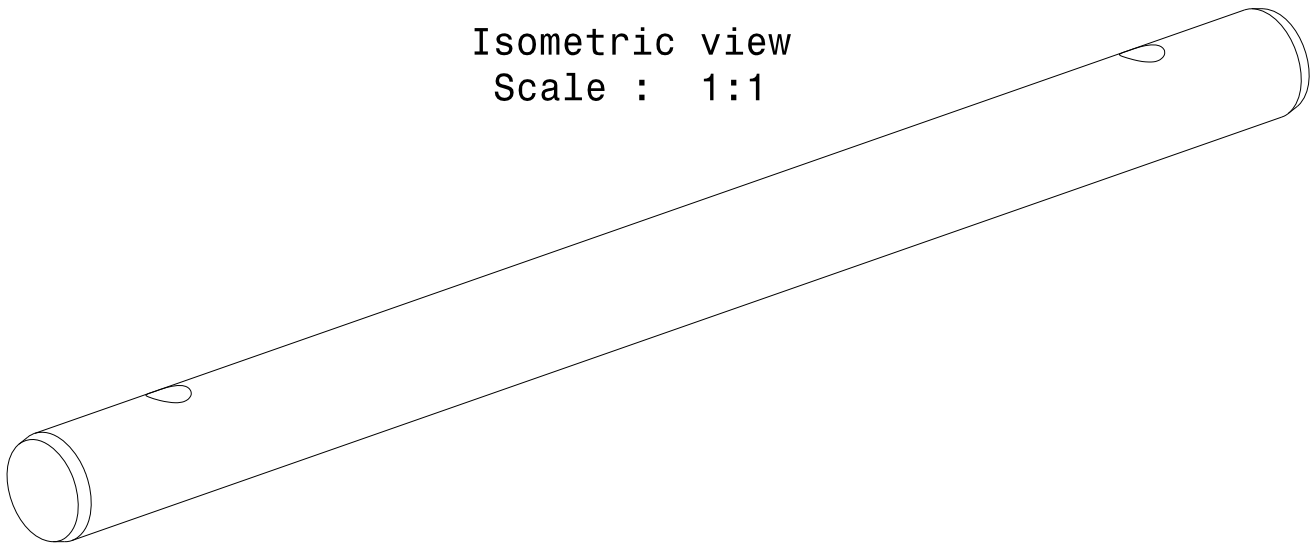

NOTA	
1	BREAK SHARP EDGES R OR CH. 0.1 TO 0.4

ISSUE			
A	NEW DRAWING	19/10/19	SEQUERA D.
IND.	MODIFICATIONS	DATE	APPROVED BY

REVISION HISTORY

DOC STATUS: IN WORK

GENERAL TOLERANCES: ISO 2768-mK UNLESS OTHERWISE SPECIFIED

WORKPIECE EDGES: ISO 13715 UNLESS OTHERWISE SPECIFIED (-0.3 / -0.1) (+0.3 / +0.1)

DESIGNED BY: SEQUERA D.
DATE: 19/10/2019

CHECKED BY: SEQUERA D.
DATE: ../../....

APPROVED BY: SEQUERA D.
DATE: ../../....

ROUGHNESS: 3.2

WEIGHT (kg): 0.299

This drawing is the property of IXEBERG SAS, it can't be reproduced or communicated without his written agreement.

IXEBERG

SCALE: 1:1

SHEET	DRAWING NUMBER	ISSUE	SIZE
1/1	EOLX1.1-D-110-001	A	A3