Front view
Scale: 1:1

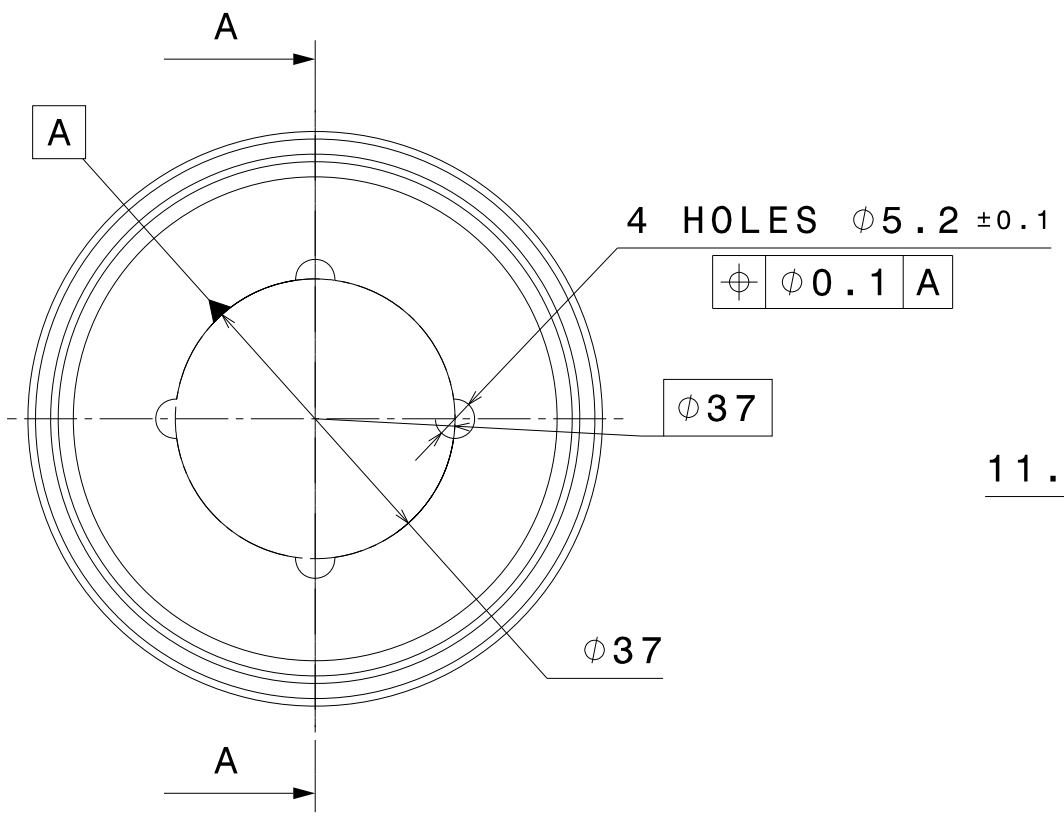

Section view A-A
Scale: 1:1

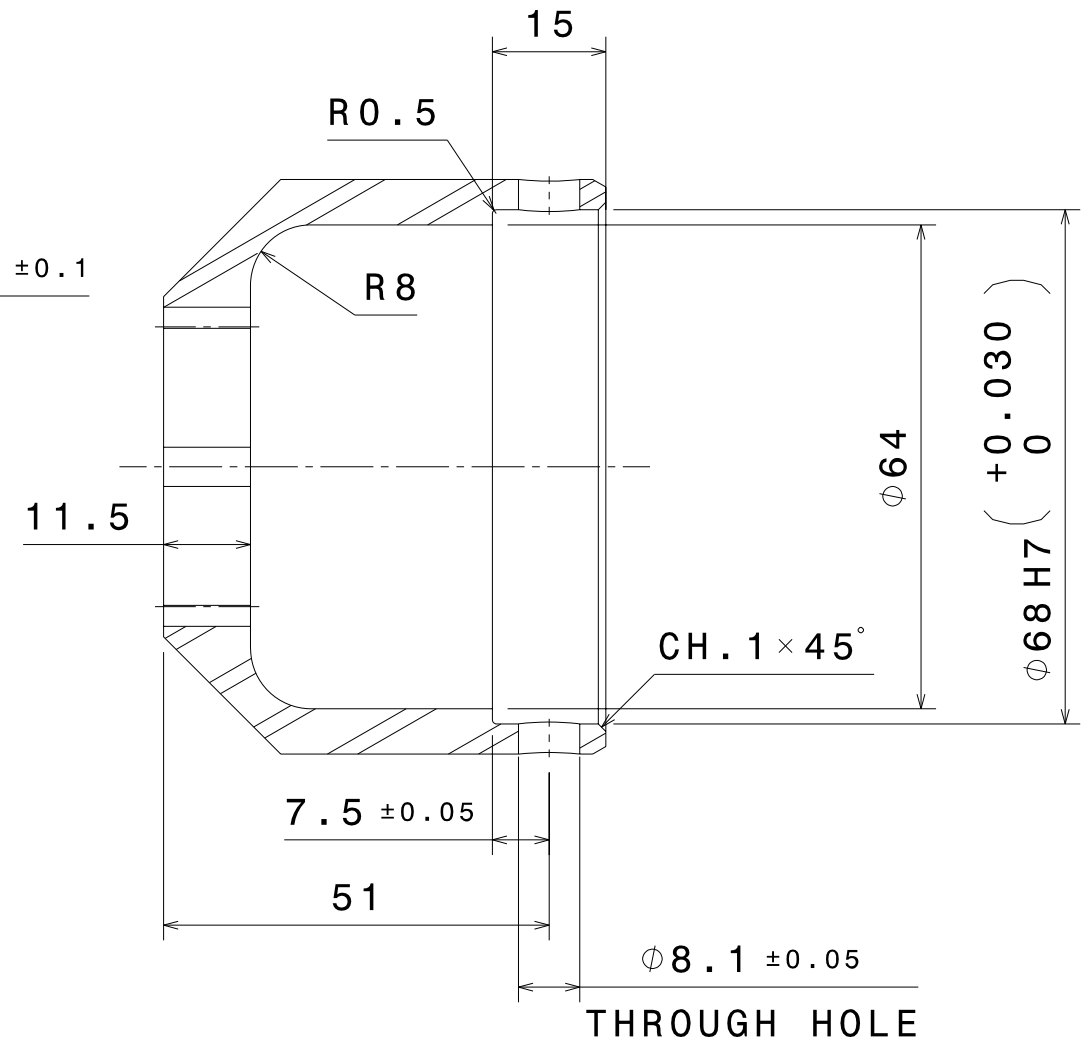

Isometric view
Scale: 1:1

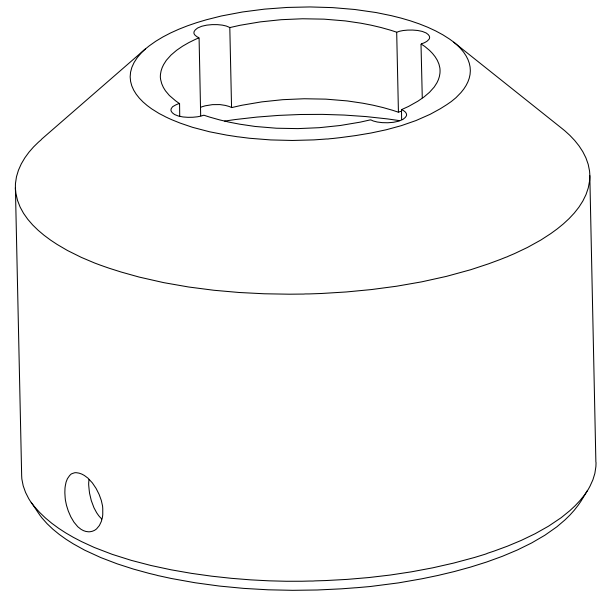

Top view
Scale: 1:1

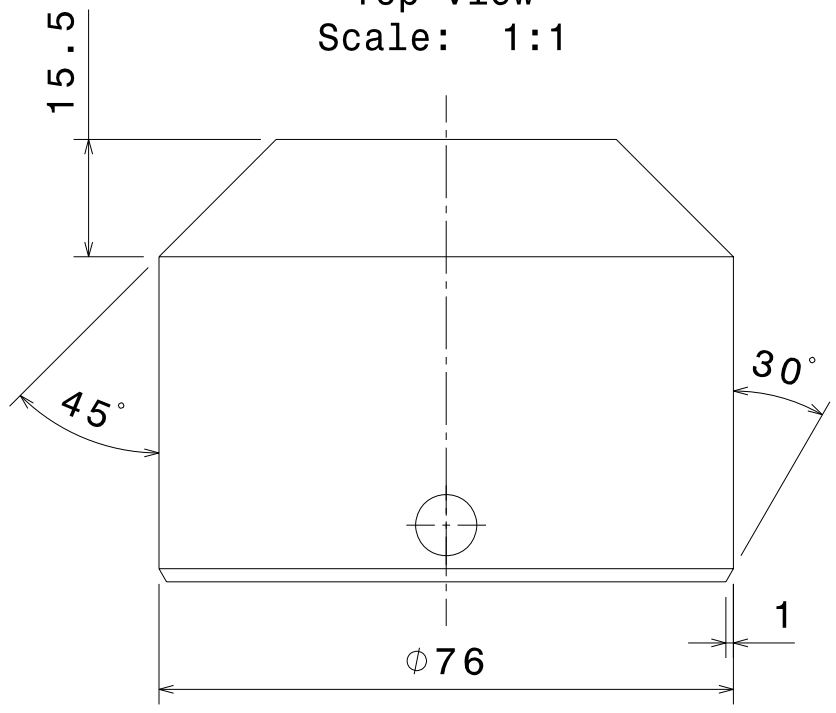

NOTA	
1	BREAK SHARP EDGES R OR CH. 0.1 TO 0.4
2	COLORLESS SULFURIC ANODIC OXYDATION ALL THE PART

ISSUE			
A	NEW DRAWING	29/12/19	SEQUERA D.
IND.	MODIFICATIONS	DATE	APPROVED BY

REVISION HISTORY

DOC STATUS: IN WORK

GENERAL TOLERANCES: ISO 2768-mK
UNLESS OTHERWISE SPECIFIED

WORKPIECE EDGES: ISO 13715
UNLESS OTHERWISE SPECIFIED
-0.3 / -0.1 ; +0.3 / +0.1

DESIGNED BY: SEQUERA D.
DATE: 29/12/2019

CHECKED BY: SEQUERA D.
DATE: ../../....

APPROVED BY: SEQUERA D.
DATE: ../../....

ROUGHNESS: 3.2

WEIGHT (kg): 0.196

This drawing is the property of IXEBERG SAS, it can't be reproduced or communicated without his written agreement.

IXEBERG

SCALE: 1:1

SHEET	DRAWING NUMBER	ISSUE	SIZE
1/1	EOLX1.3-D-200-001	A	A3