Front view
Scale: 1:1

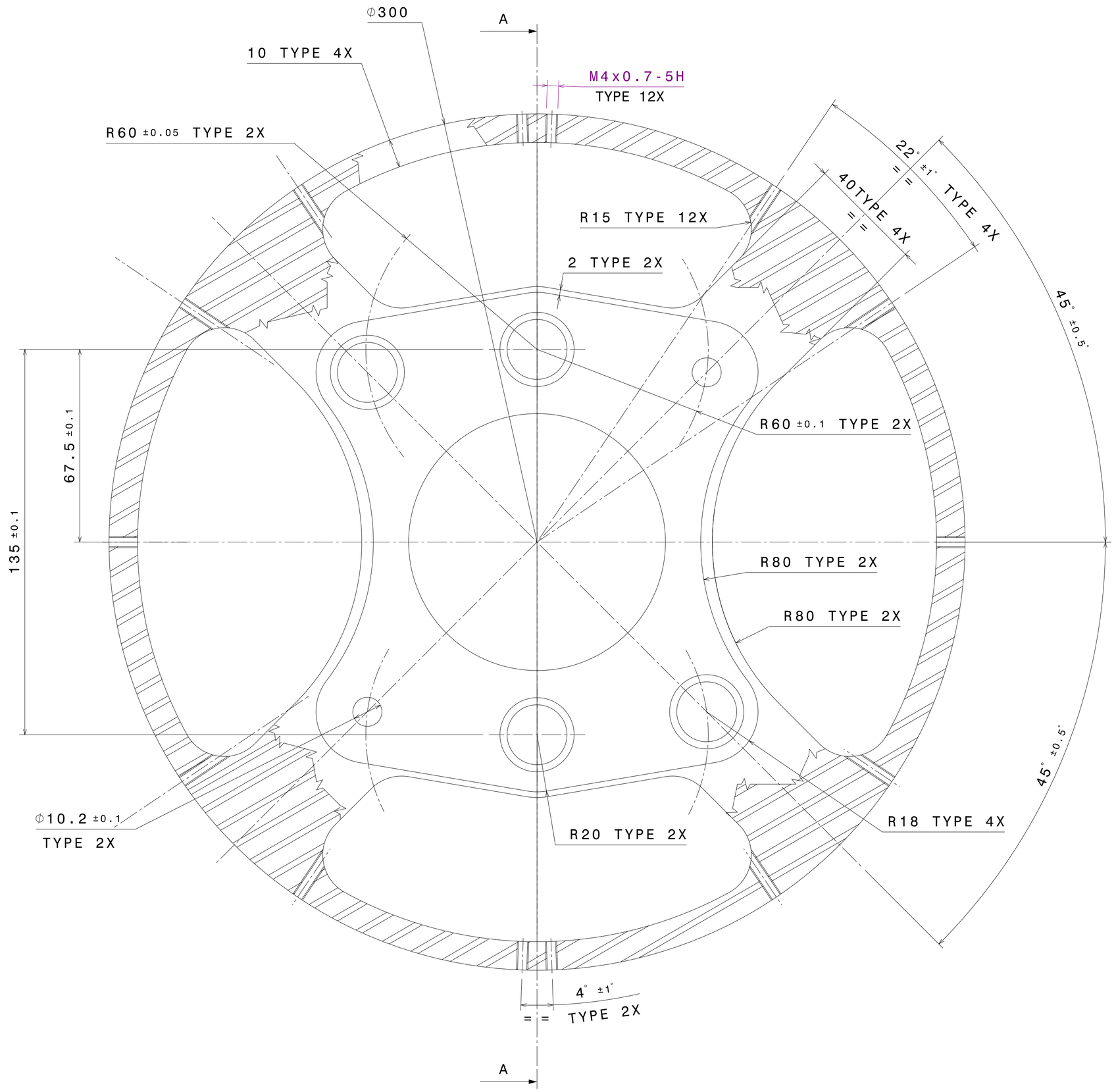

Section view A-A
Scale: 1:1

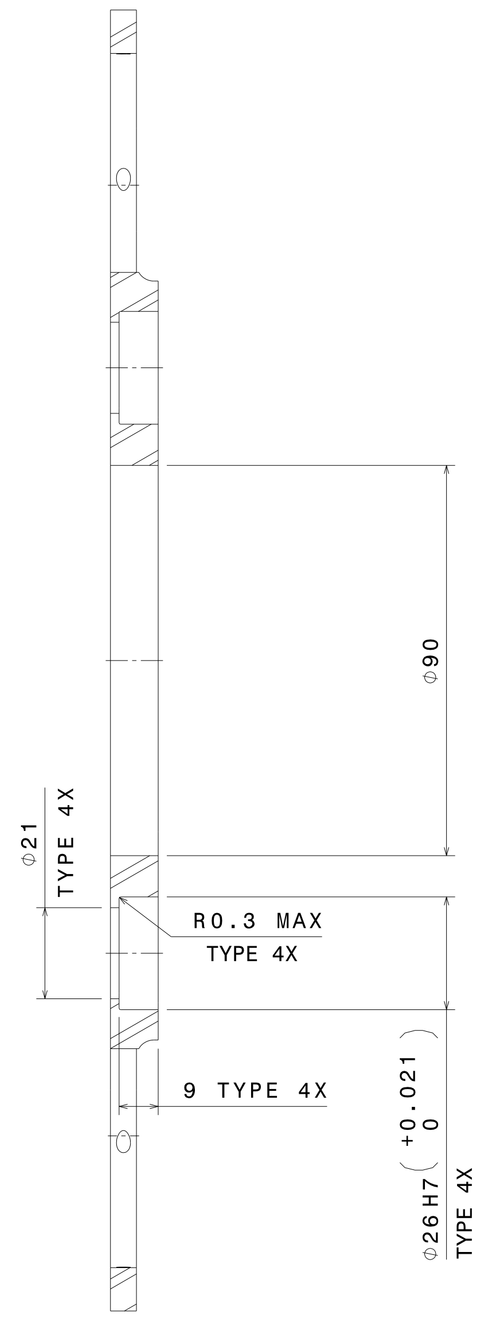

Isometric view
Scale: 1:1

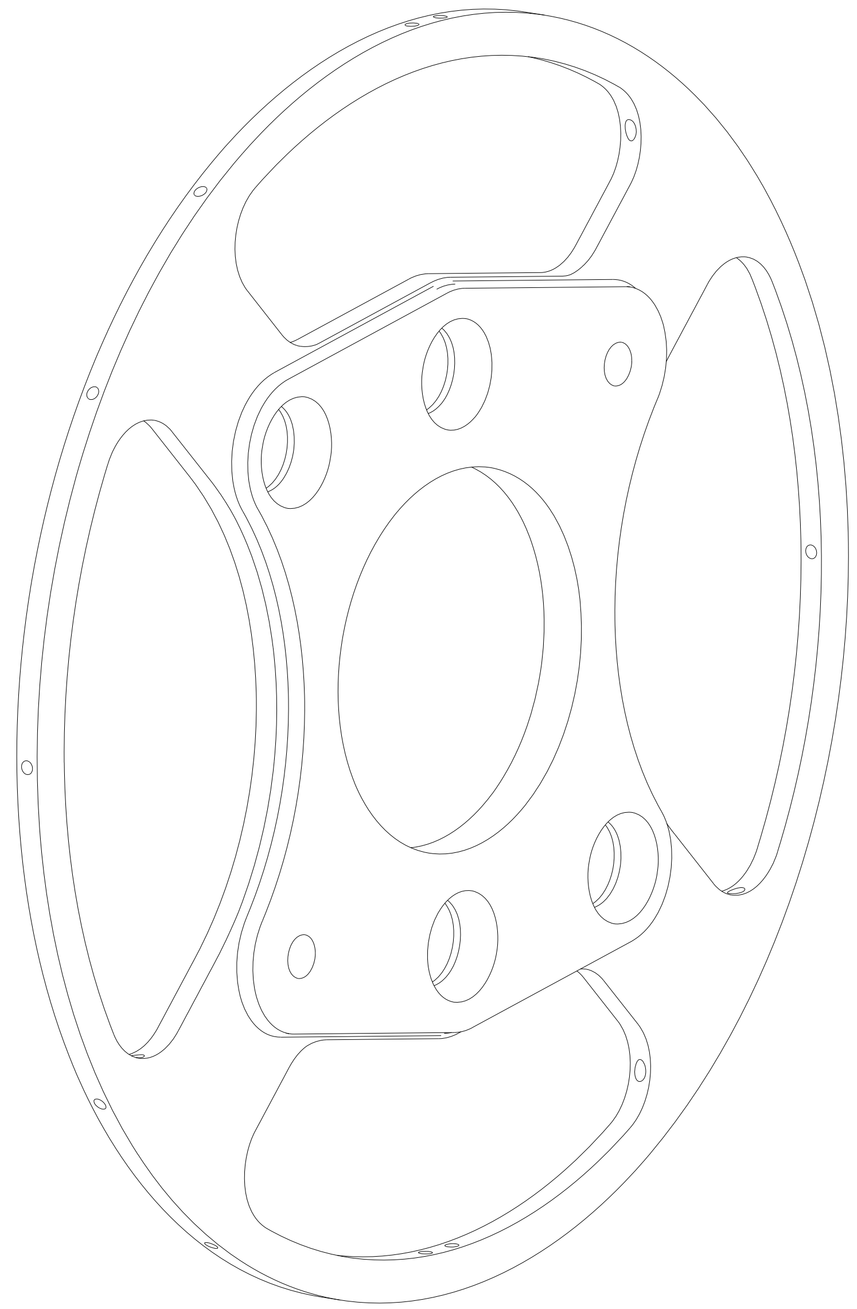

Top view
Scale: 1:1

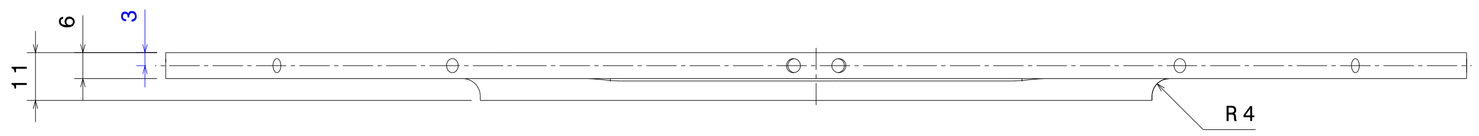

NOTA	
1	BREAK SHARP EDGES R OR CH. 0.1 TO 0.4
2	COLORLESS SULFURIC ANODIC OXYDATION ALL THE PART

IND.	MODIFICATIONS	DATE	APPROVED BY
A	NEW DRAWING	29/12/19	SEQUERA D.

REVISION HISTORY

DOC STATUS: IN WORK

GENERAL TOLERANCES: ISO 2768-mK UNLESS OTHERWISE SPECIFIED

WORKPIECE EDGES: ISO 13715 UNLESS OTHERWISE SPECIFIED

DESIGNED BY: SEQUERA D.
DATE: 29/12/2019
CHECKED BY: SEQUERA D.
DATE: ../../....
APPROVED BY: SEQUERA D.
DATE: ../../....

CONTRE CHASSIS HAUT

This drawing is the property of IXEBERG SAS, it can't be reproduced or communicated without his written agreement.

IXEBERG

ROUGHNESS: 3.2
WEIGHT (kg): 0.681
SCALE: 1:1
SHEET: 1/1
DRAWING NUMBER: EOLX1.1-D-120-006
ISSUE: A
SIZE: A1