Front view
Scale: 1:1

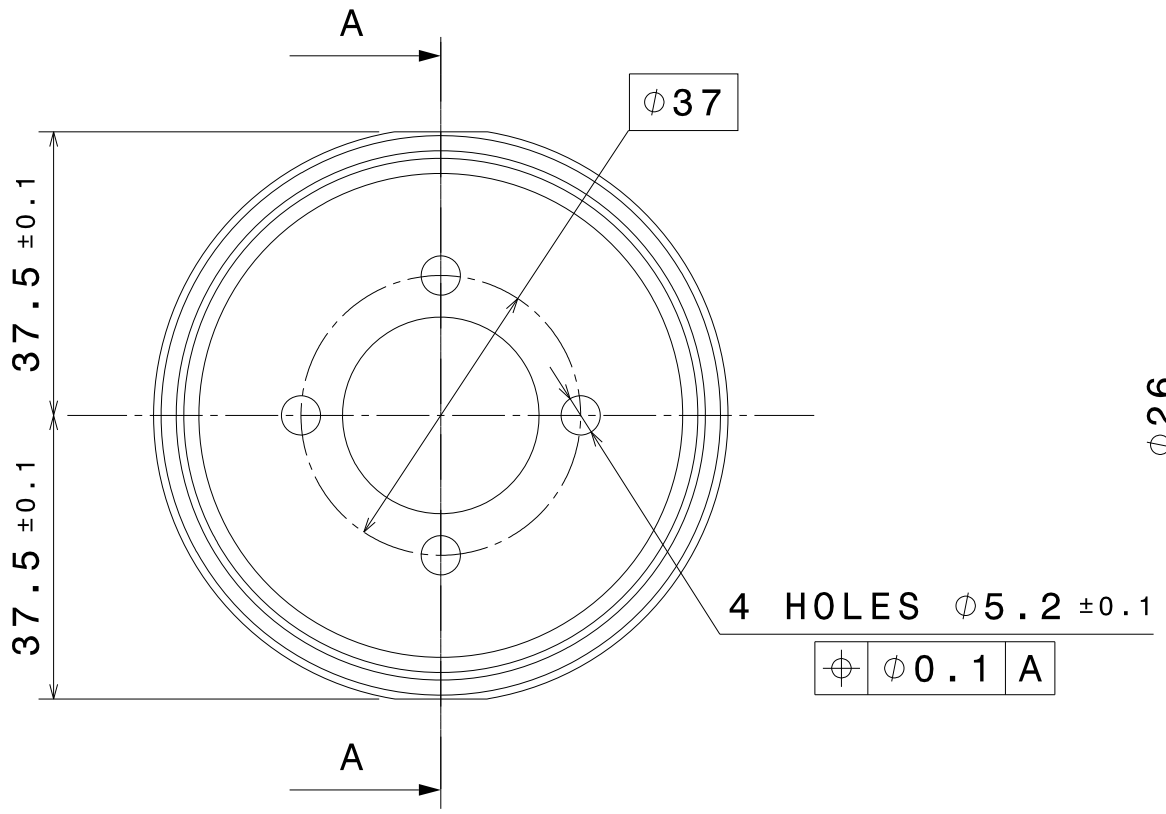

Section view A-A
Scale: 1:1

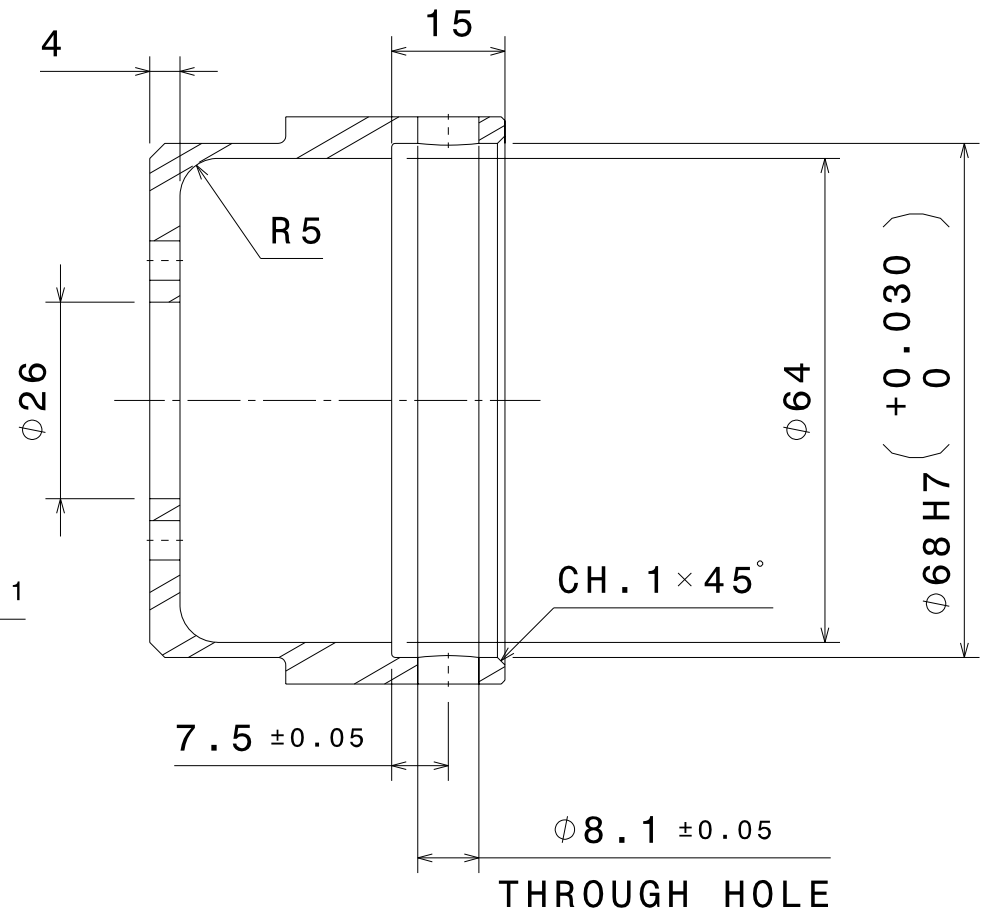

Isometric view
Scale: 1:1

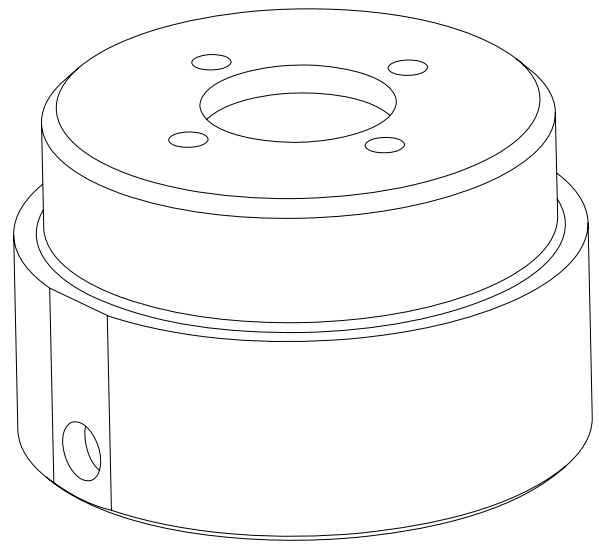

Top view
Scale: 1:1

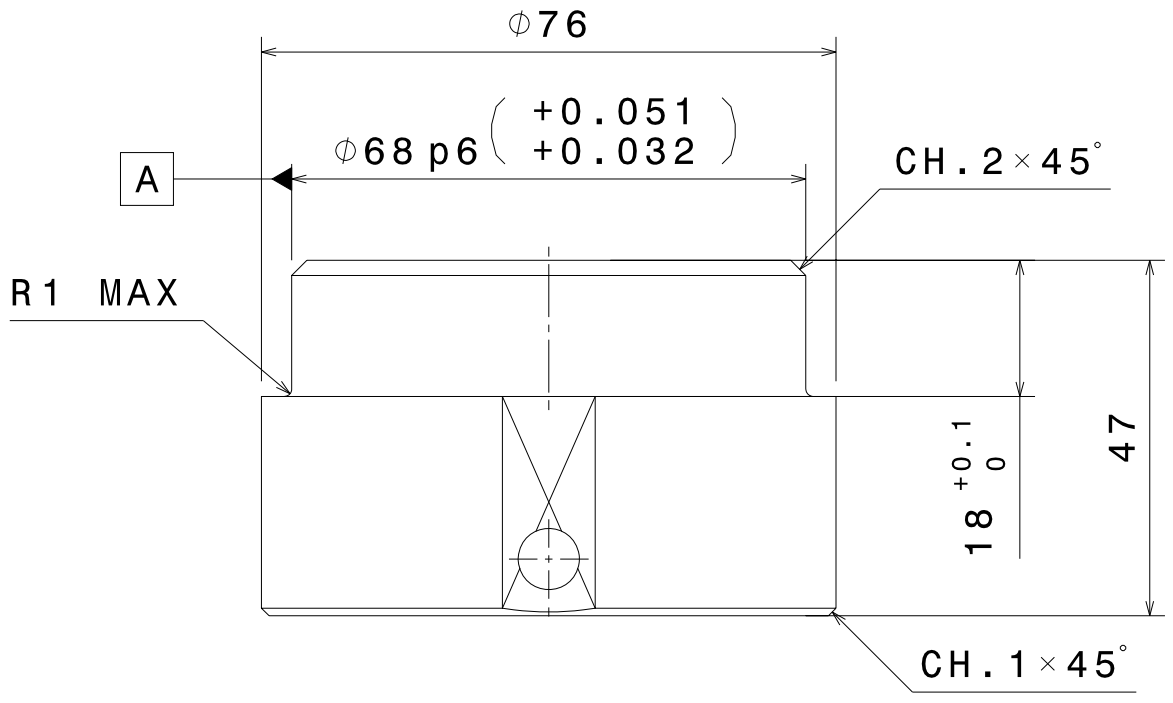

NOTA	
1	BREAK SHARP EDGES R OR CH. 0.1 TO 0.4
2	COLORLESS SULFURIC ANODIC OXYDATION ALL THE PART

ISSUE			
A	NEW DRAWING	29/12/19	SEQUERA D.
IND.	MODIFICATIONS	DATE	APPROVED BY

REVISION HISTORY

DOC STATUS: IN WORK	GENERAL TOLERANCES: ISO 2768-mK UNLESS OTHERWISE SPECIFIED	WORKPIECE EDGES: ISO 13715 UNLESS OTHERWISE SPECIFIED (-0.3 / -0.1) (+0.3 / +0.1)	
DESIGNED BY: SEQUERA D. DATE: 29/12/2019			ROUGHNESS 3.2
CHECKED BY: SEQUERA D. DATE: ../../....			WEIGHT (kg) 0.136
APPROVED BY: SEQUERA D. DATE: ../../....			SCALE 1:1
SHEET 1/1	DRAWING NUMBER EOLX1.2-D-300-003	ISSUE A	SIZE A3

This drawing is the property of IXEBERG SAS, it can't be reproduced or communicated without his written agreement.

IXEBERG