Front view
Scale: 2:1

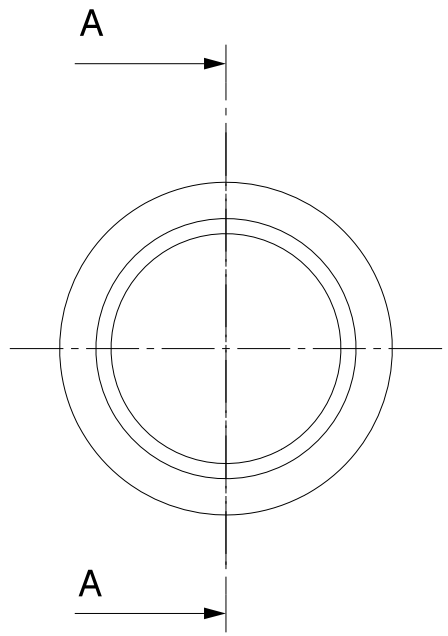

Section view A-A
Scale: 2:1

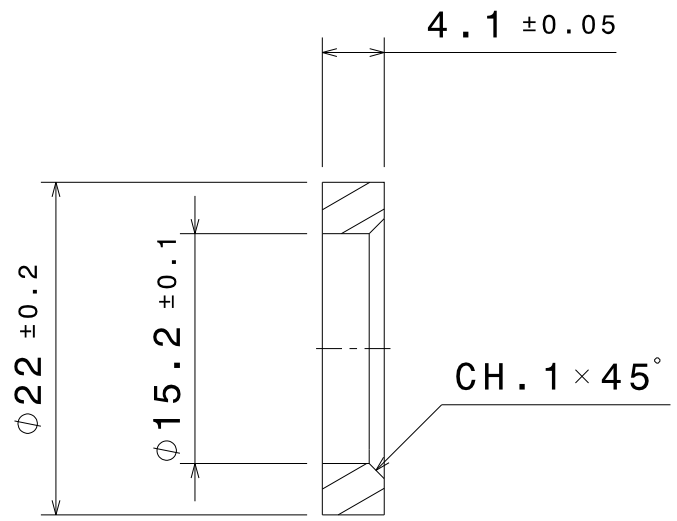

Isometric view
Scale: 1:1

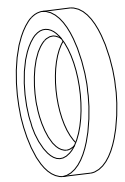

NOTA	
1	BREAK SHARP EDGES R OR CH. 0.1 TO 0.4

ISSUE			
A	NEW DRAWING	19/10/19	SEQUERA D.
IND.	MODIFICATIONS	DATE	APPROVED BY

REVISION HISTORY

DOC STATUS: IN WORK

GENERAL TOLERANCES: ISO 2768-mK
UNLESS OTHERWISE SPECIFIED

WORKPIECE EDGES: ISO 13715
UNLESS OTHERWISE SPECIFIED
-0.3 -0.1 | +0.3 +0.1

DESIGNED BY: SEQUERA D.
DATE: 19/10/2019

CHECKED BY: SEQUERA D.
DATE: ../../....

APPROVED BY: SEQUERA D.
DATE: ../../....

CALE DIA.15mm

This drawing is the property of IXEBERG SAS, it can't be reproduced or communicated without his written agreement.

IXEBERG

ROUGHNESS: 3.2

WEIGHT (kg): 0.006

SCALE: 2:1

SHEET	DRAWING NUMBER	ISSUE	SIZE
1/1	EOLX1.1-D-110-006	A	A3