Front view
Scale: 1:1

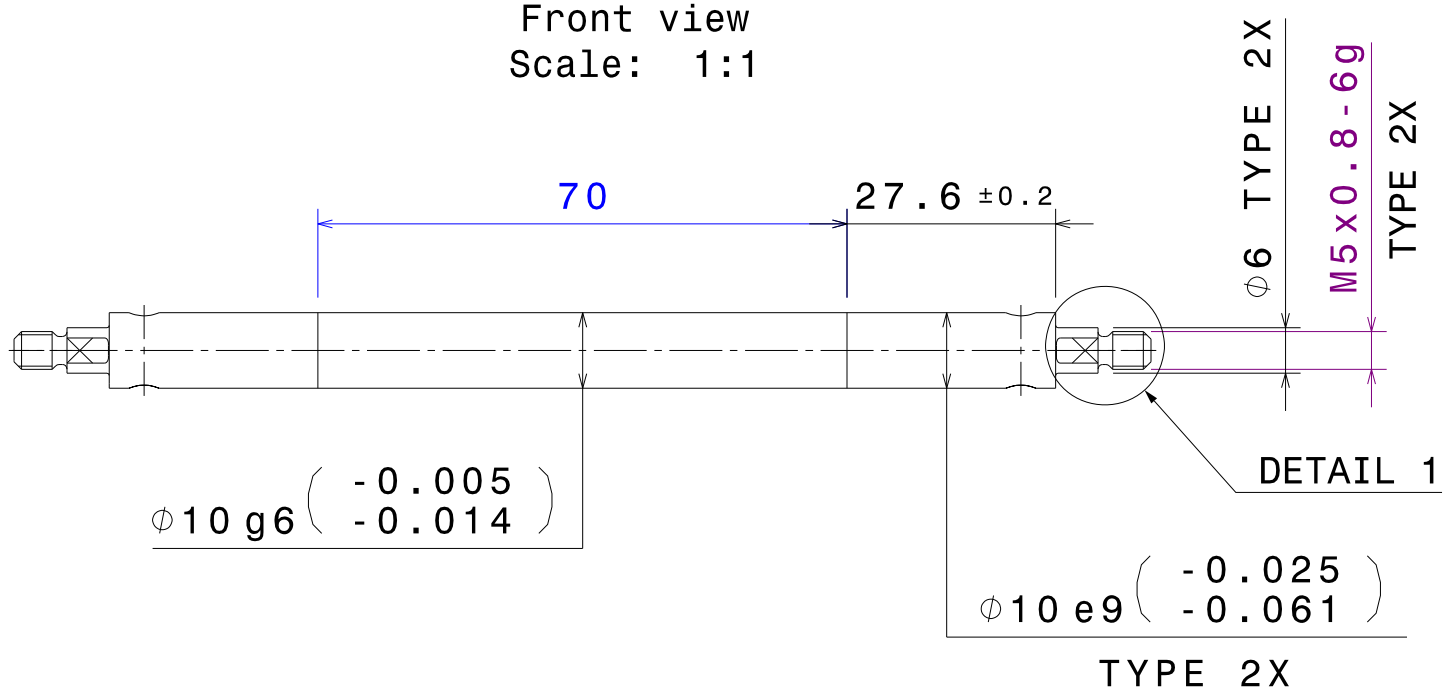

Left view
Scale: 1:1

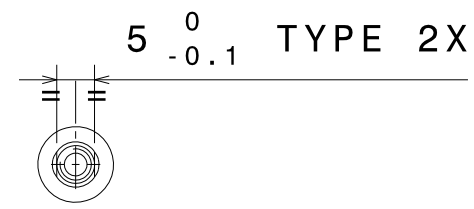

Isometric view
Scale: 1:1

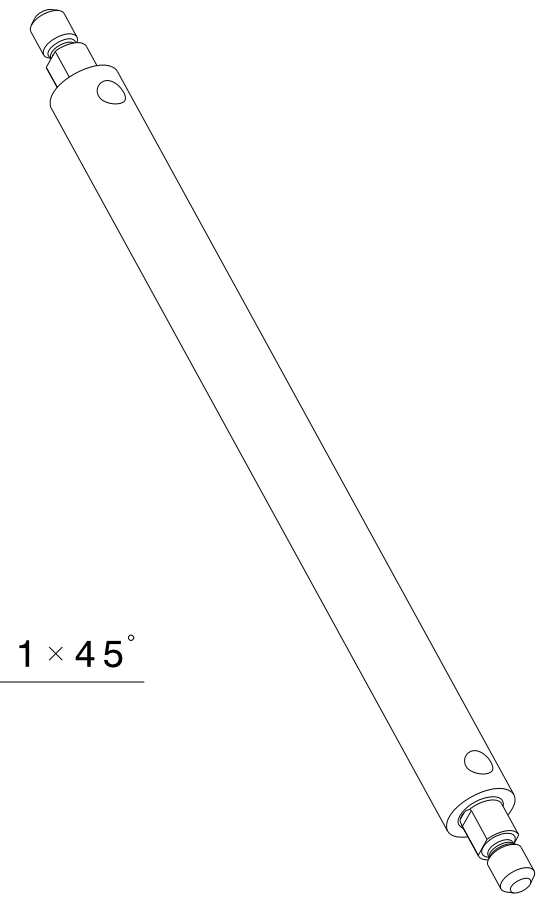

Top view
Scale: 1:1

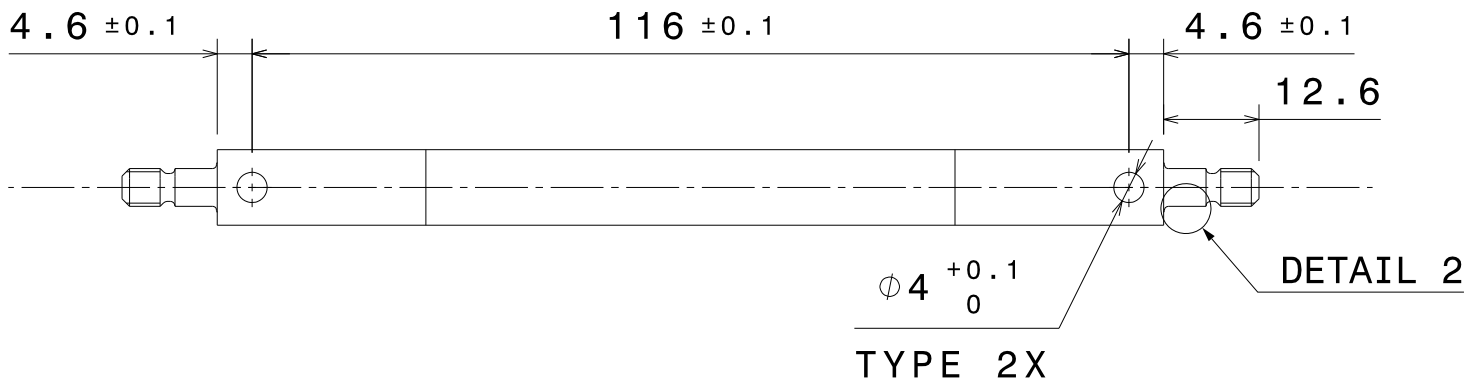

Detail 1
Scale: 4:1
TYPE 2X

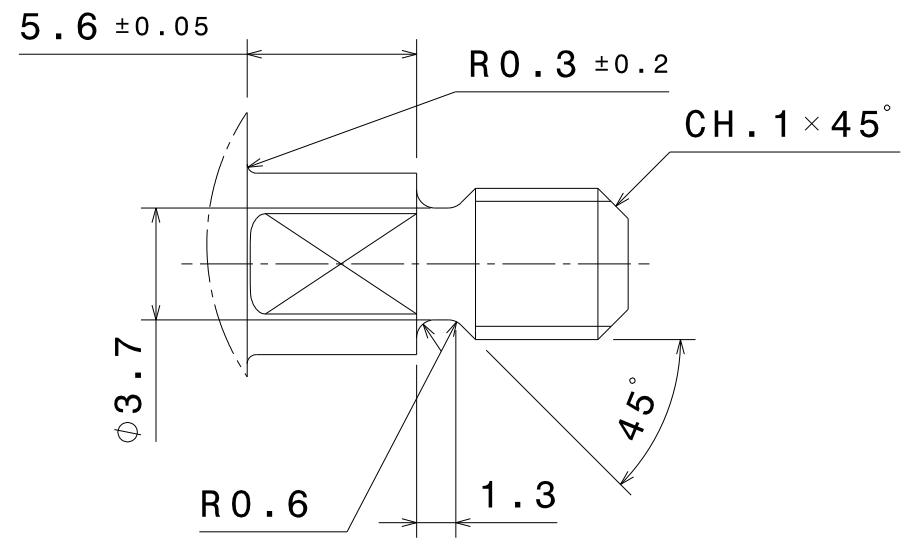

Detail 2
Scale: 4:1
TYPE 4X

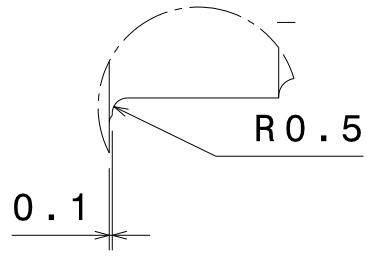

NOTA	
1	BREAK SHARP EDGES R OR CH. 0.1 TO 0.4

ISSUE			
A	NEW DRAWING	29/12/19	SEQUERA D.
IND.	MODIFICATIONS	DATE	APPROVED BY

REVISION HISTORY

DOC STATUS: IN WORK	GENERAL TOLERANCES: ISO 2768-mK UNLESS OTHERWISE SPECIFIED	WORKPIECE EDGES: ISO 13715 UNLESS OTHERWISE SPECIFIED (-0.3 / -0.1) (+0.3 / +0.1)	ROUGHNESS 3.2
DESIGNED BY: SEQUERA D. DATE: 29/12/2019			
CHECKED BY: SEQUERA D. DATE: ../../....	This drawing is the property of IXEBERG SAS, it can't be reproduced or communicated without his written agreement.		WEIGHT (kg) 0.080
APPROVED BY: SEQUERA D. DATE: ../../....	**IXEBERG**		SCALE 1:1
SHEET 1/1	DRAWING NUMBER EOLX1.2-D-130-005	ISSUE A	SIZE A3